SILICON CHIP

$9.95 W21
May 2018
11 15 COV 4 25/04/18
GG 10000939564-001-002
SILICON CHIP

MAY 2018
ISSN 1030-2662
05
9 771030 266001
PP255003/01272
$9.95* INC GST NZ$12.90 INC GST

The VERY BEST DIY Projects!

WE CHALLENGE you to find a better UPS for double or even triple the price! Ideal for home, office, commerce, industry, ...anywhere!

You've asked for it: Now Here It Is!

DIY UPS!

- 800W PLUS!
- LiFePO4 POWERED
- ARDUINO CONTROLLED
- DISASTER RECOVERY AID
- AND IT'S EXPANDABLE, TOO!

The state-of-the-art in DRONE TAXIS

Autonomous and pilotless drones are just around the corner – some are flying already!

Jaycar Electronics
Better, More Technical

duinotech

Project of the Month:

Our very own specialists are developing fun and challenging Arduino®-compatible projects for you to build every month, with special prices exclusive to Nerd Perks Club Members. Sure, you can buy off the shelves but where's the FUN in that!

IoT Smart Wireless Switch

STEP-BY-STEP INSTRUCTIONS AT: jaycar.com.au/iot-wireless-switch

Take your first step into DIY home automation. You will be able to view and control your appliances from the convenience of your phone or tablet over your home Wi-Fi network. Turn appliances on or off, or even modify the provided source code to create your own home Internet of Things (IoT) automation innovations.

WHAT YOU NEED:

WI-FI MINI ESP8266 MAIN BOARD	XC-3802	**$24.95**
PROTOTYPING SHIELD FOR WIFI MINI	XC-3950	**$4.95**
433MHZ WIRELESS TRANSMITTER MODULE	ZW-3100	**$13.95**
REMOTE CONTROLLED MAINS OUTLET CONTROLLER	MS-6148	**$19.95**

Phone not included.

VALUED AT $63.80

NERD PERKS CLUB OFFER
BUNDLE DEAL $39.95
SAVE 35%

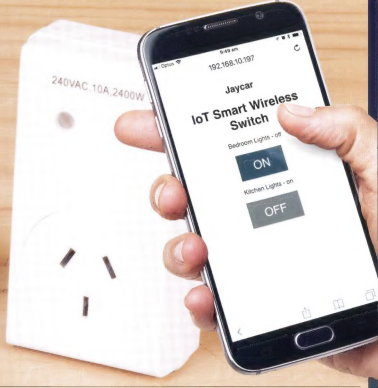

SEE OTHER PROJECTS AT: www.jaycar.com.au/arduino

More Switch?

$9.95

SPARE OUTLET MS-6149

Suitable for MS-6148 above to control more power.

Upgrade To Multiple Switches:

$39.95

3 MAINS OUTLET WITH REMOTE CONTROL MS-6147

Upgrade the above project by using 3 mains outlet. 30m range. Remote control up to 4 outlets.

Add Portable Power:

$4.95

BATTERY BANK 4 X AA USB A SKT WITH SWITCH BLACK MP-3083

Makes a superb back-up charger for any USB powered device such as an MP3 player or PDA. Slide on/off switch.

Add A Controller:

$49.95

2 CHANNEL REMOTE CONTROL RELAY BOARD LR-8855

Add remote control functions to a new project or existing installation. Momentary or latching mode. 40m max transmission range. 12VDC.

NERD PERKS CLUB MEMBERS RECEIVE:

15% OFF 3D PRINTER FILAMENT*

**Excludes 3D printer parts & accessories*

EARN A POINT FOR EVERY DOLLAR SPENT AT ANY JAYCAR COMPANY STORE* & BE REWARDED WITH A $25 JAYCOINS GIFT CARD ONCE YOU REACH 500 POINTS!

**Conditions apply. See website for T&Cs*

REGISTER ONLINE TODAY BY VISITING: www.jaycar.com.au/nerdperks

Contents

Vol.31, No.5; May 2018

SILICON CHIP
www.siliconchip.com.au

Features & Reviews

14 Drone Air Taxis – Autonomous, Pilotless and Soon!
Already trialling in several countries, you'll soon be able to call up a pilotless drone taxi from your smartphone. Fares are projected to be not much more than street taxis but there will be no traffic hang-ups! – by David Maddison

24 Tiny capsule measures, radios your gut gas data
Medical specialists need to know what gases are in your gut – but they are loathe to operate. Now researchers in Australia have come up with a capsule that measures gases and radios the info in real time – by Ross Tester

43 LTspice Simulation: Analysing/Optimising Audio Circuits
Continuing our occasional tutorial series to help you understand the very versatile LTspice simulation software. It's still available (free!) from new owners, Analog Devices – by Nicholas Vinen

82 El Cheapo Modules 16: 35-4400MHz frequency generator
Based on the ADF4351 PLL, this <$30 module can produce a signal from 35MHz to 4.4GHz with crystal accuracy. It can even be used as a sweep generator – by Jim Rowe

Some Drone "Taxis" are still figments of their proponents' imagination – but some are already in testing phase – Page 14

Tiny capsules pass through the gut, reading and sending gas data as they go – Page 24

Suffer from blackouts in your office or home? You need a UPS to ensure you don't lose valuable data. It's also the answer to maintaining power after a disaster – Page 28

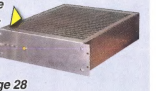

Constructional Projects

28 800W (+) Uninterruptible Power Supply (UPS)
One of our most exciting projects ever: a build-it-yourself UPS which we believe isn't as good as commercial models . . . it's much better! And if you need even more grunt, this design allows it – by Duraid Madina and Tim Blythman

36 Multi-use Frequency Switch
If you need something controlled when it exceeds a certain frequency – up or down – this superb circuit will do it. Anything that produces a frequency (or can have a sensor fitted) can be switched – by John Clarke

57 USB Port Protector – just in case!
We thought we'd fried a laptop when something managed to drop onto the exposed USB port components. We were lucky – but made up this low cost, mini PCB to guard against "oopses" in the future! – by Nicholas Vinen

70 12V Battery Balancer
12V batteries in series need careful attention to charging if you're expecting a long life. This little balancer does it automatically for you and you can even use them in parallel for extra power handling – by Nicholas Vinen

Switch just about any device if its output frequency goes above or below limits which you set – Page 36.

USB ports can be fried if you're not careful (we know!!!). Be safe with this low-cost USB Port Protector – Page 57

You can't simply charge 12V batteries in series as you would a single battery – you need a battery balancer to ensure they don't get out of balance – Page 70

Your Favourite Columns

63 Serviceman's Log
I reckon servicemen are cursed – by Dave Thompson

76 Circuit Notebook
(1) 20V, 2.5A adjustable power supply with current limiting
(2) A personal "speedometer" for joggers
(3) Sunset switch to discourage possums and other night visitors!
(4) Adjustable audio low-pass filter

90 Vintage Radio
Zenith Royal 500 "Owl Eye" AM Radio – by Dr Hugo Holden

Everything Else!

2 Editorial Viewpoint
4 Mailbag – Your Feedback
88 Product Showcase
94 SILICON CHIP Online Shop
96 Ask SILICON CHIP
103 Market Centre
104 Advertising Index
104 Notes and Errata

Find us on Facebook
www.facebook.com/siliconchipmagazine

SILICON CHIP
www.siliconchip.com.au

Publisher
Leo Simpson, B.Bus., FAICD

Editor
Nicholas Vinen

Technical Editor
John Clarke, B.E.(Elec.)

Technical Staff
Jim Rowe, B.A., B.Sc
Bao Smith, B.Sc
Tim Blythman, B.E., B.Sc

Technical Contributor
Duraid Madina, B.Sc, M.Sc, PhD

Art Director & Production Manager
Ross Tester

Reader Services
Ann Morris

Advertising Enquiries
Glyn Smith
Phone (02) 9939 3295
Mobile 0431 792 293
glyn@siliconchip.com.au

Regular Contributors
Dave Thompson
David Maddison B.App.Sc. (Hons 1), PhD, Grad.Dip.Entr.Innov.
Geoff Graham
Associate Professor Graham Parslow
Ian Batty

Cartoonist
Brendan Akhurst

SILICON CHIP is published 12 times a year by Silicon Chip Publications Pty Ltd. ACN 003 205 490. ABN 49 003 205 490. All material is copyright ©. No part of this publication may be reproduced without the written consent of the publisher.

Subscription rates: $105.00 per year in Australia. For overseas rates, see our website or the subscriptions page in this issue.

Editorial office:
Unit 1 (up ramp), 234 Harbord Rd, Brookvale, NSW 2100.
Postal address: PO Box 139, Collaroy Beach, NSW 2097.
Phone (02) 9939 3295.
E-mail: silicon@siliconchip.com.au

Printing and Distribution:
bluestar
Derby Street, Silverwater, NSW 2148.

ISSN 1030-2662
Recommended & maximum price only.

Editorial Viewpoint

Trusting our lives to computers

In the January editorial, I raised concerns about the digital security of autonomous vehicles. While two fatal accidents relating to (semi-)autonomous vehicles have been in the news lately, both appear to be due to failures in the sensors or software. One resulted in Uber suspending North American autonomous vehicle testing for an indeterminate period.

Consider that in the last 12 months, around 1250 people were killed in road accidents in Australia. Let's imagine that by making every vehicle on our roads autonomous, we could halve that, to 625 deaths per year (without any negative effects).

This seems like it would be a good thing. But will the general public accept software errors killing two people every day in Australia alone? Most of these people will not have done anything wrong and there may be nobody to "blame" in most of these incidents. Based on the reaction to the aforementioned deaths, I don't think it would go down well at all.

And then consider the future posed by the article on flying passenger drones in this issue. This brings us the possibility of fatal crashes involving not just drone passengers but also (from time to time) some hapless people on the ground, too. They could be minding their own business when, with no warning, a drone falls on them.

Yes, flying is very safe these days but commercial aviation is heavily regulated and the aircraft are well-maintained. They still crash occasionally.

And while there are a huge number of planes in the air at any given time, there would have to be many more small drones to have a significant impact on transportation. They'd have to come crashing down to earth from time to time.

So the question is this: will the general public get used to the idea of computer errors or hardware failures being responsible for so many deaths?

A different approach to project construction

On another topic, we have the first part of a very practical major project in this issue, namely, the lithium-battery-based Uninterruptible Power Supply. This is an unusual project for us because while it's quite a large and complex design, there's little soldering involved.

It's mostly built from off-the-shelf building blocks that are wired together. It does have a custom control PCB, the details of which will be presented next month but even this is based on pre-built Arduino and relay driver modules. When you look at the UPS box, mostly what you see are the large batteries and the impressive sinewave inverter.

The fascinating aspect of this project is that you could take essentially the same design and scale it down to a tiny backup supply for a few LED lights. Or you could scale it up to a huge device that would keep a household running for days without mains power. The design principles used would be basically the same.

So we had some "spirited" discussions about just how best to present it in the magazine. Is it just a UPS or is it something much more than that? We wound up mentioning some of the many other possibilities in the article. But there are lots of aspects of this design to be explored.

We'll finish describing this UPS design – which has quite a few different uses – over the next couple of issues. But we intend to revisit the concept in the future, to flesh it out. For example, we may add solar panels to keep the batteries charged when the grid fails. And we might increase the size of the battery bank and inverter power. This would greatly expand its possible uses.

In the meantime, some readers may see what we've done and decide to expand the design on their own. There's certainly nothing to stop you from doing that.

Nicholas Vinen

FREE
SHIPPING
ON QUALIFIED ORDERS*
WHAT.
6.8 MILLION+ PRODUCTS ONLINE
WHEN.
99% OF ORDERS SHIPPED SAME DAY
WHERE.
WHEREVER YOU NEED IT
AUSTRALIA
DIGIKEY.COM.AU
1800 285 719
NEW ZEALAND
DIGIKEY.CO.NZ
800 449 837
Digi-Key ELECTRONICS
1,400,000+ PRODUCTS IN STOCK | 750+ INDUSTRY-LEADING SUPPLIERS | 100% AUTHORIZED DISTRIBUTOR
*Australia: A shipping charge of $24.00 AUD will be billed on all orders of less than $60.00 AUD. A shipping charge of $20.00 USD will be billed on all orders of less than $50.00 USD. All orders are shipped via UPS, Federal Express, or DHL for delivery within 3-4 days (dependent on final destination). No handling fees. All prices are in Australian dollar or United States dollar. New Zealand: A shipping charge of $28.00 (NZD) will be billed on all orders of less than $66.00 (NZD). A shipping charge of $20.00 USD will be billed on all orders of less than $50.00 USD. All orders are shipped via UPS for delivery within 3-4 days (dependent on final destination). All prices are in New Zealand dollar or United States dollar. Digi-Key is an authorized distributor for all supplier partners. New product added daily. Digi-Key and Digi-Key Electronics are registered trademarks of Digi-Key Electronics in the U.S. and other countries. © 2018 Digi-Key Electronics, 701 Brooks Ave. South, Thief River Falls, MN 56701, USA.

MAILBAG – your Feedback

Letters and emails should contain complete name, address and daytime phone number. Letters to the Editor are submitted on the condition that Silicon Chip Publications Pty Ltd may edit and has the right to reproduce in electronic form and communicate these letters. This also applies to submissions to "Ask SILICON CHIP", "Circuit Notebook" and "Serviceman".

Information from ACMA about LED interference

It was with some interest I read a letter during the night on TV channel interference by D. McC. in the April 2018 issue of SILICON CHIP. Your response was a bit surprising.

ACMA recognises LED lights as a cause of interference (siliconchip.com.au/link/aajp). This information was provided to me by an employee of ACMA who was investigating TV interference at my premises and adjoining addresses.

Our problems developed a few years ago and have increased over that time. There seems to be a number of factors involved including solar panel inverters and radiation from power lines (which is worsening).

We need someone with the right equipment to visit our area after hours (ACMA have difficulty with staff beyond business hours!) to make observations when interference actually occurs.

We also have a radio reception problem on the AM band at 873kHz, causing increased background noise.

Geoff Lloyd,
Hornsby Heights, NSW.

Response: it definitely is plausible that poorly designed LED switchmode drivers could cause significant interference but we're unsure why it would affect just one TV channel frequency. Perhaps the affected stations are at an odd harmonic of the switching frequency.

Grid-feed inverters and power-line based networking certainly are contributing to a much higher level of RF background noise and can swamp AM reception in some areas.

Game Boy mystery solved

In the Ask SILICON CHIP section of the February 2018 issue, B. M. of Kiama Downs asked about a watering system project based on a Game Boy. The article appeared in *Electronics Australia*, June 2000, on page 41.

John Heffernan,
via email.

More range for the nRF24L01+ Digital Radio Modules

I read Jim Rowe's interesting article in the January 2018 edition regarding working with the nRF24L01+ digital radio modules. I purchased a couple from the SILICON CHIP Online Shop and yesterday, updated the firmware on a couple of LCD BackPacks I previously built for other uses and programmed them with your "checkout" program.

It worked straight out of the box but I found a few ways to tweak the hardware and software to achieve better range and performance.

Firstly, I think the recommended 10µF bypass capacitor should be considered mandatory! Without these, I was getting a range of not much more than 1.5m and even then, it was a little erratic in one direction. After fitting 10µF MLCC capacitors, range went up to about 7-8m but no more, without lots of time-outs (1 in 4). Also, it was still a little asymmetric.

I downloaded the Nordic IC product specifications and also went back to the September 2016 Circuit Notebook article and noticed they both used a lower data rate and a higher power setting.

I tried your code with RegData(5) set to &H2626 (for 250kb/s, and 0dBm) and RegData(3) set to &H2453 (to set ARD to 1500µs, to suit the slower speed). I must admit that I haven't a clue what the first bytes in each RegData value relate to – I was concerned they might involve the CRC – maybe you can shed some light on this.

Anyway, this worked, and the range was at least doubled – to 16m+ going from a room downstairs, through a couple of doorways, upstairs, and around a corner – so not really "line-of-sight".

With the increased power setting (0dBm) and lower data rate (250kb/s) and the devices fitted with 10µF MLCC bypass capacitors, I got reliable communications at 200m with line-of-sight (I had one unit set up on a bin near the road). It's possible that this set-up is capable of more range but I ran out of road and was starting to get amongst trees in our local park.

Finally, I don't understand why you're reversing the byte order of the payload before transmission and then reversing them again on reception, before output. I deleted both the byte reversal process when assembling the

LED interference can affect some TV channels

I also had the same problem D. McC. had (Ask SILICON CHIP, April 2018, page 89).

The family living across the street from us had a tree in their front yard all decked out in LED lights. When the lights were turned on, channel 10 would disappear and channel 7 would pixellate.

The family concerned are a rather prickly bunch and weren't going to have a bar of it. I managed to talk the husband into coming over for a demonstration while his wife at home turned the lights off and on.

Sure enough, the reception fault followed the light operation. The light installer wouldn't believe it! A week later, the installation crew arrived with boxes of lamps sourced from China.

They changed all the lamps and we had no more problems. I could not get any information from the installers on the lamps and the prickly neighbour was not all that forthcoming with information either.

Looking from the side fence, I could see that they had a glass outer envelope, were supposedly LEDs and glowed with a slight orange tint. I hope that helps.

Fred Thorpe,
Narrabeen, NSW.

Your Favorite Development Tool Just Got Better

MPLAB® PICkit™ 4 In-Circuit Debugger - More Functionality and Faster Programming at the Same Low Price

There's a new hero in town: the MPLAB® PICkit™ 4 In-Circuit Debugger. Available at the same low price as its predecessor—the popular PICkit 3 debugger—it enables faster programming and offers more functionality for easy debugging of the full range of PIC® microcontrollers and dsPIC® Digital Signal Controllers with Flash memories. To boost your application development, the MPLAB PICkit 4 debugger includes these key features:

- Uses powerful graphical user interface of MPLAB X Integrated Development Environment
- Wide target voltage of 1.20-5.5V; target power of 50 mA
- Matches the silicon clocking speed to provide the fastest programming possible
- Connects to PC using Hi-Speed USB 2.0 interface
- Programmer-to-Go (PTG) support with an SD™ card slot to hold program data

MPLAB PICkit 4
In-Circuit Debugger
(PG164140)

Contact Information
Microchip Technology Australia
Email: aust_nz.inquiry@microchip.com
Phone: +61 (2) 9868-6733

microchip DIRECT
www.microchipdirect.com

MICROCHIP

www.microchip.com/PICkit4

The Microchip name and logo, the Microchip logo, dsPIC PIC and MPLAB are registered trademarks and In-Circuit Serial Programming and PICkit are trademarks of Microchip Technology Incorporated in the U.S.A. and other countries. All other trademarks are the property of their registered owners. © 2018 Microchip Technology Inc. All rights reserved.

OCEAN CONTROLS

Helping to put you in Control

Ethernet Modbus TCP 8 isolated
The A-1855 Remote Modbus module provides 8 Isolated Digital Inputs and 8 transistor Digital Outputs (sink). Ethernet supports a Modbus TCP protocol.
SKU: YTD-555
Price: $164.00 ea + GST

Modbus RTU/ASCII 8AI
Provides 8 Analog Inputs (0~10v), 4 transistor digital outputs and 2 analog outputs (0~10v). RS-485 interface supports a simple ASCII protocol and Modbus RTU.
SKU: YTD-410
Price: $149.00 ea + GST

Digital Pressure Sensor
Our new budget priced pressure sensor. An IP65 process transmitter with two-wire, 4 to 20 mA output, LED display and ¼" G (parallel BSP) process connection. ±0.5% F.S. accuracy. 0 to 10 Bar.
SKU: FSS-1584
Price: $159.00 ea + GST

Isolated Serial Converter
The Yotta Control A-1521 is an isolated RS232 to RS232/422/485 serial converter. Features baudrate to 115.2kbps, 3000VDC isolation and 10-30VDC powered.
SKU: YTC-201
Price: $119.00 ea + GST

Small Cooling Thermostat
Small DIN-rail mount cooling thermostat with built in bimetallic sensor for keeping things cool.
SKU: HEC-005
Price: $19.95 ea + GST

Starter Kit Programmable Logic Relay
TECO SG2-12HR-D Starter Kit. Kit includes all the components required for your SG2, with a 15% Saving on the regular price.
SKU: TEC-080
Price: $359.00 ea + GST

Large Temperature Display
Large Temperature Indicator with range -19.9 to 99.0degC.
SKU: HNI-080
Price: $269.00 ea + GST

For Wholesale prices Contact Ocean Controls Ph: (03) 9782 5882 oceancontrols.com.au

Prices are subjected to change without notice.

data to transmit (PrepmsTime), and removed the "RestByteOrder" subroutine. This didn't make any difference to the operation of the units.

Ian Thompson,
Duncraig, WA.

Jim Rowe replies: it sounds like the changes to the RegData values are worthwhile. Note that 0dBm is only 1mW, so this higher power setting is still perfectly legal. I implemented the data byte reversal because the nRF24L01 datasheet implied that it was required but you have apparently found that it isn't.

How to reach audiophile nirvana

I read your response to the query regarding directionality in audio cables on page 91 of the April 2018 issue. You left out some important details.

It's a little-known fact that the "break-in period" can be reduced significantly by hanging the cables up by one end. Furthermore, directionality can be improved by stroking the cables by hand while they hang. Firmly stroking each cable, from bottom to top, for about an hour each day over a month, will virtually eliminate any need for further "break-in".

Phil Denniss,
Darlinghurst, NSW.

Computer security seems like a joke

Your remark in the February 2018 Editorial Viewpoint that "Unless you become a hermit and live in a cave in the mountains, I'm not sure that you can ever be completely safe from these flaws" seems to be on the money. In just the last few months, the following has occurred:

1. WPA2 WiFi encryption has been shown to be flawed and vulnerable.
2. Equifax (a credit rating agency) in the USA has been hacked and the personal details (social security numbers, accounts etc) of 150 million US citizens have been stolen. I recently found out that Equifax operates in Australia too.
3. Spectre & Meltdown were discovered (the topic of your editorial). These are reputedly launched through JavaScript on web pages. These apparently also put "the cloud" in jeopardy.
4. Recently, it was reported that all that is needed now for ID theft is someone's Driver's License number. Enough other personal details are available (eg, through Social Media) to then enable the theft. Recently, telcos and electricity suppliers have been asking for License numbers.
5. The Russian government allegedly had a backdoor into Kaspersky anti-virus software which they used to get their hands on secret information from the NSA. This is scary as anti-virus software requires privileges and access to core parts of the computer. In the past, there were strong rumours of Microsoft providing backdoors for the NSA etc.
6. It was revealed that the Australian Electoral Commission is using archaic systems and software. DOS was mentioned as still being in use.

Regarding your recommendation of "patching", this concept is in itself not secure and creates vulnerabilities. The business models of Apple and Microsoft exacerbate this. Remember you don't own the OS, you are a renter and the landlord has another key. A recent example is Apple purposely and surreptitiously interfering with (ie, reducing) the iPhone's speed.

Now I wouldn't suggest one becomes a hermit but because hardware is now so cheap, I suggest that you should have two systems, one air-gapped (the one holding private information) and one connected to the 'net for browsing. Regularly wipe and re-install the OS on the internet-connected computer. This is much easier with Linux.

The "Data Breach Mandatory Notification" legislation came into effect on the 22nd of February. Though it is (at the moment) limited to companies with $3 million turnover and above, it should be a wake-up call to everyone.

J. Williams,
Elanora, Qld.

Comment: while it's true that patching your operating system can introduce bugs, including security vulnerabilities and backdoors, unpatched systems are even more vulnerable. A computer connected to the internet that hasn't been updated in a year or more and that isn't behind a comprehensive firewall is almost certainly to have been already compromised.

Image on monochrome TV is not a moiré pattern

On page 81 of the March 2018 issue, in the article on the Analog TV A/V Modulator, I noticed the caption for the right-hand image of the test pattern on

a B&W set says that the screen features "moiré pattern[s]" due to the interaction of the screen and camera. But you can see that this patterning only occurs in the parts of the picture which have colour (ie, in the colour bars).

This is due to the 4.433MHz PAL colour modulation sidebands modulating the CRT beam on the TV set. There is no (or little) patterning in the black, white or grey areas of the picture.

This could be eliminated by adding an LC trap circuit in series with the video signal line, tuned to 4.433MHz. A switch could be added to switch it out for use with colour sets. It could be added to the pin 11 input of IC6. Alternatively, it's possible to fine-tune the TV slightly so it is less noticeable.

As usual, it was an excellent magazine; I would not miss it. You have some very clever and innovative designers.

Rod Humphris (ex RMIT),
Ferntree Gully, Vic.

Faulty premises Earth connections are still a menace

The Publisher's Letter in the August 2014 issue of SILICON CHIP warned of the dangers of faulty Earth connections and the possibility of electrocution during the removal and replacement of water meters.

I was sufficiently concerned that I bought a clamp meter to check the current in the incoming water pipe of our house. I was relieved to find that any current was below the threshold of measurement.

In The Australian, 7th March, 2018, there is an account of a child who is in a critical condition in hospital after receiving a severe shock from a garden tap. It seems likely that a faulty Neutral/Earth connection was responsible.

It would seem prudent to have house Earth connections checked every few years since they can be degraded by corrosion, with fatal consequences.

James Goding,
Princes Hill, Vic.

Leo Simpson responds: This issue raises its head again, in the most tragic circumstances! I agree entirely that Neutral and Earth connections to all properties should be checked a matter of routine by the supply authorities and if anomalies are found, they should be fully investigated and rectified, no matter how many properties may be affected in any one instance.

In fact, it probably should be a requirement that any property being sold or leased should have a test certificate to state that the wiring is safe, just as most states have a requirement that a home swimming pool must be fully compliant with fencing and other regulations

I was certainly not happy that the anomaly I discovered at my home (as detailed in the August 2014 issue) was not fully investigated and remedied.

Changing the colour of Earth wires is not permitted

The comments by Thomas Siegmeth on page 6 of the March 2018 issue regarding the misuse of green or green/yellow wire for non-Earth wiring in a mains-powered device are correct. However, the comment about sleeving the green/yellow conductor to solve this is not correct.

The last paragraph of AS/NZS 3000 clause 3.8.2 prohibits the use of sleeving to use a green/yellow wire as an Active or Neutral conductor.

Geoff Coppa,
Alstonville, NSW.

Response: we agree that this is not acceptable since it would be possible for the sleeving to fall off, or someone might cut it off and then forget.

Some ideas for future seismographs

I received my April edition of SILICON CHIP yesterday and was particularly interested to read your 3-Axis Arduino Seismograph article. I have a particular interest in seismology and appreciate your point when you say that there are few standard seismic data formats that support multi-channel recording.

One that does is the PSN format developed by a polymath electronics-software Californian gentleman named Larry Cochrane.

Larry and his clever equipment have been the backbone of serious amateur seismology for the last couple of decades but sadly Larry is soon retiring and many amateurs worldwide are now scratching their heads and pondering life post-Larry. Larry and his hardware and software are available at his website: http://psn.quake.net

Using Larry's equipment I operate a little seismic observatory at Coonabarabran, NSW, data from which is posted at: www.map.id.au/seismic

Any earthquake big enough to make the news is likely to show up here. You

may be interested to note that I have recorded the last three North Korean nuclear tests, including the latest one which wasn't far from being a China-cabinet rattler. The details are at: www.map.id.au/seismic/epso_events_nk_nuclear_tests.html

On my property, I operate a three-element seismic array, where the sensors are at the vertices of an equilateral triangle measuring 200 metres per side.

This gives me the ability to unilaterally compute the bearing to a particular earthquake/blast/event. I wish to make a similar array but with the triangle measuring around 4km per side.

My small seismic array is hard-wired with buried cables but a large array will require RF links of some sort and I have been pondering my options.

Reading your article, another possibility occurred to me. If the Arduino logger could incorporate precision GPS timing as well, one could potentially create a powerful tool for seismic monitoring (eg, for mining and engineering structures) and the creation of large seismic arrays.

Generally speaking, professional seismograph equipment costs a fortune, so making a seismic array by deploying many autonomous precision-timed loggers is not an option.

But if your Arduino could time-stamp data to an absolute precision of say 10 milliseconds or better, then that would be potentially really useful to me. It also means you don't have to fiddle with setting RTCs and dealing with their time drift.

So would you consider a future design improvement/upgrade to incorporate GPS timing as well? I'm not sure if this is really possible, but if so it would be most interesting.

Incidentally, I think your use of WAV for this application is clever. WAV data will be generally a lot more compact than standard seismic formats, and it is then also trivial to "listen" to earthquakes. Listening to speed-up seismograph data was quite a hobby at one time, and I own a 33rpm vinyl record made in the 1960s which contains exactly that.

Anyway, it was a great article and clever to think of using WAV to solve the compact-multi-channel problem.

Michael Andre Phillips,
Coonabarabran, NSW.

Nicholas responds: Thanks for your feedback. It certainly would be possible to use a GPS module for timing; we considered it but thought it unnecessary. If you want to synchronise multiple geographically-distributed seismographs then it makes a lot of sense and we will certainly incorporate such a feature in any future seismograph.

We did find and consider the PSN file format when designing our seismograph but it has a major problem in that it does not store the data for multiple orientations or sensors in an interleaved fashion like the WAV file format. Rather, multi-sensor files are simply multiple single-sensor files "glued" together.

That makes it almost impossible to generate them on-the-fly. You have to record to multiple individual files and then combine them when they are complete. Whereas with a .wav file with multiple channels, we can simply append new data on the end and then update the header periodically and no post-processing is needed.

How accurate are GPS speed readings on an incline?

I was intrigued by Leo Simpson's assessment of the Navman Driveduo in the February issue of SILICON CHIP. I use a GPS in my 1969 vehicle which has its speedometer hidden in a black hole in the dashboard and of course it measures in miles per hour.

So I use a GPS unit as a speedometer, to give me some peace of mind on speed-related matters. It reads my speed to within 1km/h. Or does it?

As an engineer, I am always interested in how and why things work and I have some questions about GPS. For instance, it would appear to me that it measures speed in the horizontal plane only, my reason for this summation is that the location is based on the intersection of the signals from satellites in orbit at my location on the Earth's surface; this can be shown as a vertical line emanating from the centre of the Earth.

The different locations over a set time will give the speed of travel between these two points on the Earth's surface. One assumes here that one is travelling on a level surface.

But what happens when one is travelling on a steep gradient? Does the GPS speed reading drop as it only takes into account movement in a plane that's tangential to a spheroid representing the Earth?

I believe there are some models of GPS which include an altimeter. It is possible that these models may well give an accurate speed reading on steep inclines but without this function, how does the two-dimensional GPS operate on slopes? I know that there is some variation on gradients as my speedometer tells me so.

John Hardisty,
Burnie, Tas.

Response: as far as we know, all GPS receivers track altitude as well as latitude and longitude, regardless of whether the altitude is displayed. So it should be possible for a GPS unit to give an accurate speed reading even on a steep incline. This does require the correct calculation to be used, which takes into account changes in altitude; we assume most units will do this but who knows.

GPS speed readings are likely to be most accurate when travelling "on the flat" but they are always behind the eight-ball in adjusting to changes in speed. This is due to the averaging required to hide slight inaccuracies in GPS position readings.

As you might expect, GPS accuracy is also poorer in hilly country or in "canyon-like" city streets with lots of high-rise buildings.

The OBD setup is generally quicker to respond and is probably more accurate but tyre wear (and long-term changes in wheel diameter) would also affect accuracy; not that OBD is any good to you in a 1969 vehicle! The only truly accurate speed measurement system would involve a RADAR or LIDAR setup.

Updated GPS-based Frequency Reference wanted

Regarding your September 2011 update of the popular GPS-based Frequency Reference project, I note that like most GPS-based frequency references, it has a fixed output frequency of 10MHz. While this is a common frequency used by test equipment, I have seen some devices which use a reference frequency which cannot easily be derived from 10MHz.

For example, the Philips PM5193 function generator needs a reference frequency of 8.589934592MHz so I would like to see a GPS-based Frequency Reference design which provides reference frequencies other than 10MHz.

One possible way to achieve this is to use a DDS IC such as the AD9956 with a 48-bit (or longer) frequency

PCBCART

Exceptional, Cost-effective Full Turnkey PCB Service from China's most experienced provider

With 10+ years' experience serving tens of thousands of international clients, our expanded custom PCB manufacturing, assembly and parts sourcing capabilities allow us to fulfill almost all kinds of PCB needs at reasonable price.

We insist each electronic project (including those still at prototyping stage) deserves superior quality PCB services, that's why we follow the strictest quality standards during production. Got a project ready to bring into reality? We're happy to discuss.

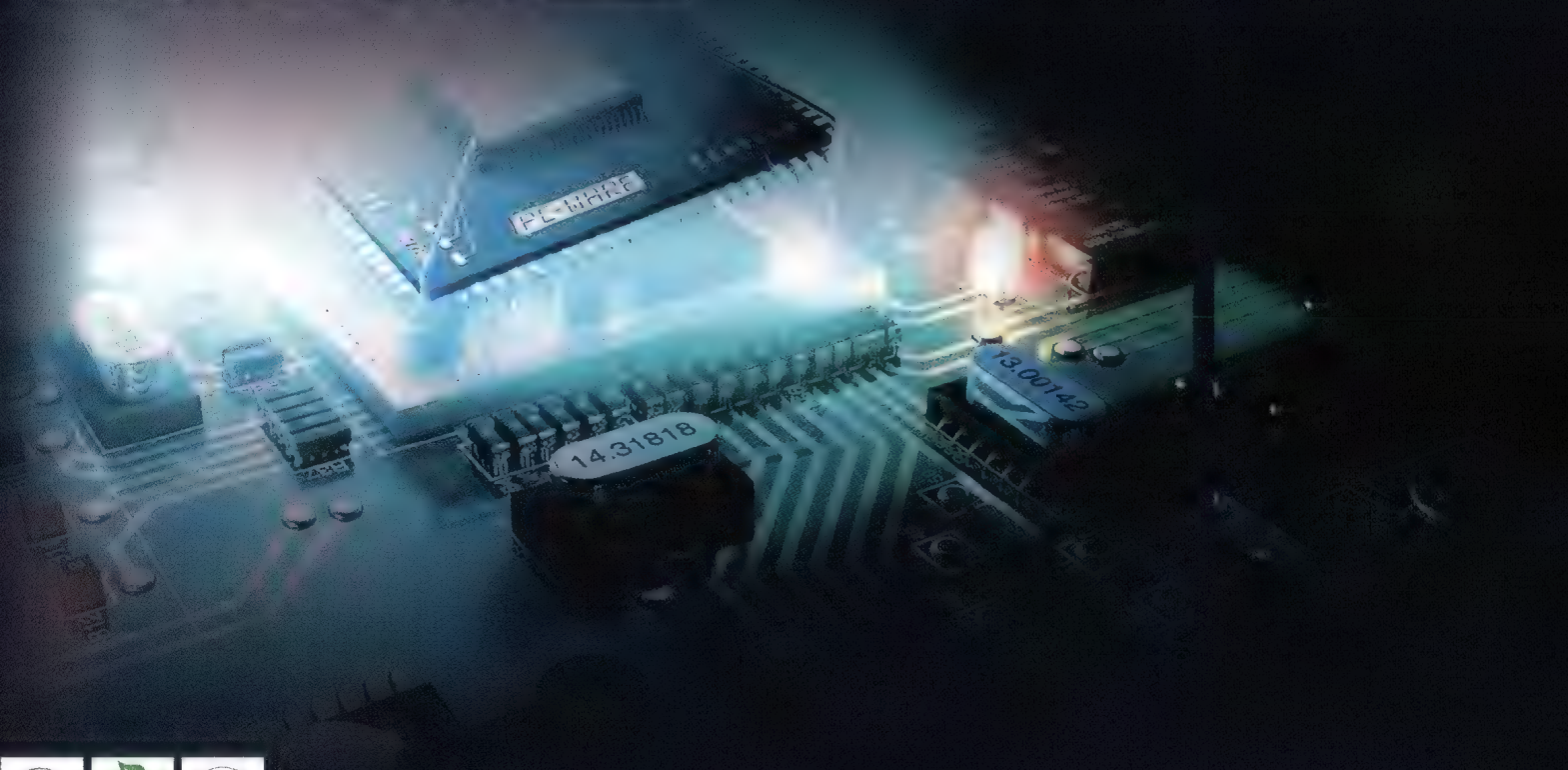

ISO 9001 SQCC · Pb LEAD FREE · UL

WWW.PCBCART.COM

sales@pcbcart.com

word (with a frequency multiplier IC for the reference oscillator) to generate frequencies with the smallest possible error. This error should be calculated and displayed by the unit.

Bryce Cherry,
Rockhampton, Qld.

Response: we are working on a new GPS-based Frequency Reference design and have taken your suggestion into account. It will have a fixed 10/20/40MHz (selectable) output and multiple configurable outputs which are derived from the main reference clock using programmable PLLs. These low-jitter outputs should be programmable from 0.1-167MHz in steps of around 10kHz.

Another faulty motor run capacitor

The letter from Ian Thompson on page 8 of the March 2018 issue was very helpful. I live in a rural area without reticulated water and so water to the house is supplied from underground tanks via a pump. Given that the area is rural and reasonably heavily wooded, we get our fair share of blackouts.

To cope with this, we have a 2.4kVA inverter-generator which I plug into an appropriate socket at the main switchboard. This has worked successfully for eight years. Recently, during a blackout, the pump tripped the overload protection on the generator. That had never happened before. So like Leo Simpson, I assumed that it was bearings in the pump or motor.

I dismantled the pump and found no problems with the pump or motor bearings. I checked the pump controller and found no problem there either. The points in the controller had some small amount of carbon on them but not more than I would expect from eight years of use.

The power was back on so I reassembled the pump and it worked normally. During the next blackout, the pump was able to run off the generator but it seemed to be loading it more than usual.

Having read the aforementioned letter in the March 2018 issue, I realised that I had not checked the run capacitor. I thought that if the capacitor failed, the motor would simply not run. Two days later we had a blackout and the pump tripped the generator again. So I removed the capacitor and measured its capacitance. It was marked as 20µF but measured 11.6µF.

I purchased a 20µF motor capacitor from Jaycar which measured 19.9µF. I fitted it and re-connected the pump. The blackout was still in effect so I switched it on under generator power and it ran perfectly. It now runs more quietly with the new capacitor but I don't understand why. Thanks for the tip.

Peter Chalmers,
Clear Mountain, Qld.

Navman and DTV antenna

Your article on the Navman GPS satnav is very much welcome. I am an enthusiast for this "Real Time" Traffic Information System, yet I am often criticised for using one. For example, "you don't know your way home"... and then I say, "why does it take you so long to get home, were you stuck in a traffic jam?"

Anyway, I was most impressed with the article but I use the TomTom 520 with voice commands, where the RTT (Real Time Traffic) information is received via Bluetooth from my phone and is displayed down a panel on the right-hand side of the TomTom screen.

I get an icon on my phone and the TomTom showing a "Two Car" symbol which indicates that I am sharing traffic information with fellow users.

This, in turn, helps TomTom developers improve mapping quality and provide regular map updates, eg, for speed cameras and road changes. But regardless of the brand of the unit, the article was wonderful reading. The whole magazine is great. I also liked Leo's Digital TV antenna project.

Peter Casey,
West Pennant Hills, NSW.

Response: Google Maps also shares traffic data with other users, which is a great feature and a good reason to prefer using a phone for navigation – but you do need a reasonable amount of data on your plan.

Smartphone app makes project hard to justify

Most days I drive a section of road, taking my kids to school, which has 100km/h point-to-point average speed cameras. I have been imagining about a device on the dashboard with two buttons, one marked 100km/h and the other 110km/h, these being the only two speeds I have encountered average speed cameras at.

Pressing the appropriate button at the start of the policed zone would cause the device to (via GPS) start to track your average speed and would warn you via an LED or alarm sound if this exceeded the maximum you had chosen. Pressing the button again at the end of the policed zone would turn off the monitoring.

Additionally, it could learn the location of the speed zone and will automatically monitor the area in the future. The March 2018 editorial prompted me to submit this as there probably is a bad app for this already! Love your magazine; keep up the good work.

Alan Williams,
Adelaide, SA.

Comment: as you have implied, there are already a number of smartphone apps for average speed cameras and while we aren't sure if they do exactly what you have suggested, it does seem like they would be useful to ensure you don't run afoul of an average speed camera. On that basis, we probably can't justify a custom-designed device for this purpose.

Another option would be to fit cruise control to your car (or use it if you already have it). In many cases, except when you're travelling down a steep hill, it will hold your vehicle very close to the set speed. This is especially true if you have an automatic transmission which is able to change down for engine braking (or you could do it yourself with a manual transmission).

An easier method for assembling RTL-SDR kit

Jim Rowe was absolutely right when he said, in the November 2017 issue, that assembling those RTL-SDR kits was difficult.

I bought one of those kits and assembled all but the connection from the toroid T1 to the RTL2832U chip. It then sat for months while I pondered how to do it. I ended up soldering two dressmaker's brass pins to a piece of Veroboard as pictured to the upper right, then bent the pins so that when the Veroboard was on top of the RTL2832U IC, the pins would apply pressure to pins 4 and 5 and make an electrical connection.

I have been using the kit now for several months without any problems. I don't see why this should be any less reliable than, say, a socketed IC.

I used 22 SWG tinned copper wires soldered to the Veroboard and to the main PCB for support in two places

Shown at right are two brass pins soldered to a piece of veroboard. Below it is the board attached to the Banggood SDR kit in a way that the brass pins from the board apply pressure to pins 4 & 5 of the RTL2832U IC, so that it makes electrical contact.

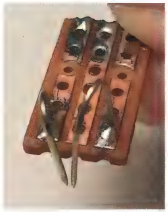

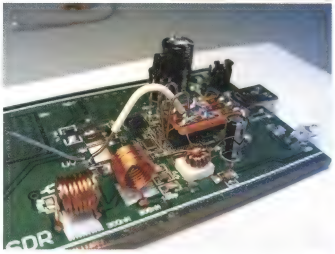

WIA
ANNUAL RADIO AND ELECTRONICS
CONVENTION
SEA WORLD • GOLD COAST
18TH – 20TH MAY 2018

WIRELESS INSTITUTE OF AUSTRALIA

Join us for an exciting program of presentations and demonstrations of interest to all radio and electronics experimenters.

Registration and detailed information is available at www.wia.org.au/convention or by emailing wiaagm@wia.org.au.

with a third wire soldered to the frame and bent so that the pins were aligned with and able to apply sufficient pressure to the pins of the RTL2832U chip. The very thin wires from toroid T1 were soldered to the Veroboard tracks to complete the circuit.

Regarding the software, you can install Airspy's SDR# for Windows as described in Jim's November review. However, the Windows software for SDR are something of an ordeal to install, so instead, I installed a recent version of gqrx (version 2.11, from http://gqrx.dk) on Linux Mint (version 18.3) to get this SDR-RTL kit fully operational very quickly.

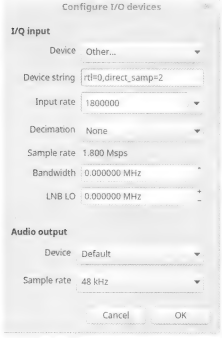

Note that for HF reception, gqrx needs to use the parameters as shown in the adjacent screen grab. I am very pleased with the result, although a wideband HF preamp is worth adding for receiving marginal signals.

R. Matthews,
Adelaide, SA.

Confusion over slowing of GPS clock pulses

Thank you for published the Analog Clock-based 1pps signal source in the Circuit Notebook section of the May 2017 issue, as I requested.

I finally got around to assembling it. Initially, everything worked as expected. The startup LED did its thing and a 40ms pulse got fed into my digitally-controlled analog clock, which ran as expected.

I let it run on the bench for some hours but when I next checked the time on it, my clock was very slow; losing one hour in six. So something was quite wrong.

Stopping the board and restarting it caused it to perform as expected. I then attached a CRO probe to monitor the 1pps output. It timed at exactly 1Hz, so I let it run like that.

Checking after one hour and a bit, I noticed the clock started losing time again and the CRO pulse was now 0.5Hz, exactly half the expected rate.

I have no idea what is going on in that PIC chip. However, I observed there is a 1pps pulse available at the white GPS connector wire for a short time when the GPS had locked onto its satellites. So I decided to use that instead.

I simply removed Q2 and shorted the collector-emitter pins to turn on the GPS permanently. There now was a nice 1pps pulse available but at only 3.3V peak-to-peak. A 4050 buffer (all 6 gates in parallel) boosted that to a 5V pulse and with that my clocks keep running right on time.

There was perhaps a misunderstanding at my initial request as low power consumption is not an issue

with my two clocks, both using 1970s technology. A 5V/2A plug pack easily provides the almost 5W of power requirement. So the extra drain of the permanently on GPS is no problem.

If you think running the GPS powered like I do might do long-term damage to the PIC chip please let me know but I doubt it.

Klaus Sussenbach,
Doubleview, WA.

Response: this is because the GPS Analog Clock board drives the clock mechanism with one pulse per second, but the pulses alternate in polarity between positive and negative, as required by the clock motor. We realise now that the software would need to be modified to produce a positive pulse each time.

The reason it starts out at 1Hz is that this is the unit "quick stepping" the hands around to the correct time (it assumes they start out set at 12 o'clock).

A modified version of the firmware is available for download on our website under May 2017. This produces positive pulses only at 1Hz with no quick stepping, to suit clocks like yours.

Praise for Super Clock and feedback on Altimeter

I built the Micromite Super Clock about a year ago and I must say it's been one of the best projects I've ever made. I have been a keen clock collector for many years and I greatly appreciate the accuracy of the clock.

I used the DS3231 RTC as the timebase with a view to changing to the GPS if the lack of accuracy warranted it. During the past eight months, the clock has lost less than 1.5 seconds after I adjusted the basic accuracy with the Micromite software.

I used www.timeanddate.com/worldclock/timezone/utc as my time reference and it's interesting to notice the occasional difference with phone and TV time.

As a result of the incredible performance, I've given up on the GPS timebase because it would no doubt be a problem supplying the GPS module with a good signal at all times inside the house.

I recently constructed the Micromite Altimeter which works satisfactorily except for the Humidity sensor which reads quite low against two weather stations. At the moment, the Micromite reads 23% against 37%. The sensor responds to my finger or breath and rises to 100% very quickly and returns in similar time. I think a sensor change may be in order.

The temperature reading looks good but I can't determine whether you take this reading off the BMP180 barometer sensor or the DHT22 humidity/temp sensor.

I don't fly and I built the altimeter to use for bushwalking, car trips etc where it's interesting to follow the terrain. This is not the first altimeter I've built. About 10 years ago I built a PIC-based unit from an article in *EPE* magazine. This suited my purpose better than the Micromite because you could set the altitude directly into it from contour maps or start from home with the known altitude set.

The Micromite is more suited to aviators in its present configuration and I wonder whether you could modify the software along the lines of the "QNH" mod you recently included so that a base altitude can be entered in. I feel such a modification would greatly increase the appeal of the unit for us non-aviators.

Finally, I would like to suggest that you dispense with the large "TOUCH TO CHANGE" area on the screen and use a touch screen function similar to the Super Clock. The area of the present screen is somewhat wasted by the TOUCH button especially as it's so bright and detracts from the overall readability of the screen.

I have modified my unit to use just one case rather than the two as presented. The sensors are fitted into a cut-down smaller plastic box on the back of the main case. The little box is ventilated with a number of holes and the lid screws for the small box now retain the sensor housing to the main case. The heating problem is no longer an issue and in addition when walking as the unit is only on for short periods.

Bob Temple,
Churchill, Vic.

Response: note that your local microclimate can vary considerably from that of nearby weather stations (Bureau of Meteorology or your own). Just as your local temperature can vary by several degrees compared to other nearby sites, humidity can vary considerably too and depends on your proximity to bodies of water, vegetation, being in a valley and so on.

Faulty LCD screen for BackPack

Firstly, congratulations on achieving 30 years. Thirty years of producing a truly quality product reflects passion and commitment. You have, I believe, contributed, in a big way, to the education of many of today's electronics engineers; by firstly kindling their interest in the subject and then by showing them where a career in the industry might lead.

I believe you have contributed, both directly and indirectly, to the advancement of humanity. Also many have become materially better off through your endeavours. For me, I am still being thoroughly entertained each month. I am not a whiz so I get a big thrill from making things from recycled parts and getting them going with PICAXE and now Micromite.

On that topic, I built the Micromite Plus LCD BackPack V2 in May 2017 but ran into problems running the GUI CALIBRATE command. The following is an example of what happens when I try to calibrate the touchscreen:

```
> gui calibrate
Warning: Inaccurate calibration
> gui calibrate
Warning: Inaccurate calibration
  (calibration could complete
  twice)
> gui calibrate
Error: Touch hardware failure
> gui calibrate
Done. No errors (calibration
  successful)
> gui test touch (however test
  touch failed three times)
> gui calibrate (tried to re-calibrate)
Error: Touch hardware failure
```

...and so on.

After installing the replacement programmed Micromite chip you so kindly sent me, I became very despondent as the touchscreen still didn't respond correctly. It still had intermittent failures so I put the project aside.

I was then greatly heartened to find others with very similar problems, as per "BackPack problems may be due to bad LCD connections" in Mailbag, December 2017, so I dusted off my BackPack and started "hiking" again. I checked my construction again and finding no faults, reconnected the LCD, fired it up and guess what, it works. I was so excited I went and hugged my darling wife!

Problem is, I don't know exactly what fixed it. The only difference is that when I reassembled the LCD to the BackPack, I left out the four small Ny-

lon washers. This would have brought the two boards closer by about 0.5mm and also allowed the male and female headers to further engage, maybe creating a better connection.

Now the "calibration" and "gui test lcdpanel" commands execute OK. However, there are missing pixels on my screen. If I colour in the entire screen there appears a grid of vertical and horizontal lines where the pixels do not respond to touch. Has anyone else reported this fault? Are we dealing with a dud batch of LCD boards?

Stephen Somogyi,
Barrington, NSW.

Response: it does sound like your original problem was due to intermittent bad connections on the LCD header. Yours is the first report we've had of missing pixels/rows/columns on the LCD screen.

We have had a few people complain that the touch controller doesn't work and we replaced the screens in those instances, and a couple of other screens that were totally dead.

A few were also replaced because they were damaged in transit (cracked). Overall they do not appear to be too unreliable but the defect rate is still higher than we would like. We will send you a replacement screen as yours seems to be faulty.

Using relays to switch 3-phase mains

I found the Lath-E-Boy Controller project in the January issue (siliconchip.com.au/Article/10933) interesting. But I have a comment regarding the text in the breakout box on page 43, titled "Using it with a 3-phase motor".

It says that RLY3 will need to be a four-pole type to allow it to switch all three phases. That's fair enough but it will need to be a relay specifically designed for switching three-phase mains.

That's because there's nominally 400V DC between phases (415V DC for 240VAC). The relay will need sufficient internal dielectric strength and physical separation between contacts to handle this.

I built a relay box some years ago using 250VAC-rated Omron relays and switching three-phase mains, it generated a loud bang and welded all contacts together upon first operation!

I'd be inclined to err on the safe side and use a 250VAC-rated relay (eg, the Jaycar model suggested for single-phase use) to drive a 415V four-pole contactor. A contactor with a 12V coil would remove the requirement for an extra relay. Cheers and keep up the good work.

Kit Scally,
Canberra, ACT.

WRESAT article enjoyed

Thank you for continuing the great tradition of in-depth science-technology articles. Catching up on my wet weather reading with the covers on in Adelaide, and after the recent publicity of the WRESAT launch anniversary and interviews on the ABC, I greatly enjoyed reading the WRESAT article in the October 2017 issue.

It took me back to my visit to the Woomera museum in winter 2008 and staying in the Redstone block at the ELDO. I found the other resources page very useful.

I started reading electronics magazines (and constructing projects) at the age of 13 while the last moon landings were being made. The only launch I have ever attended was the Woomera weather balloon. Keep up the good work and congratulations on the 30th anniversary.

Roger Curtain,
Williamstown, Vic. SC

Radio, Television & Hobbies: the COMPLETE archive on DVD

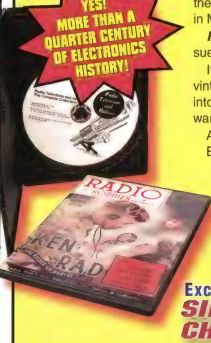

This remarkable collection of PDFs ***covers every issue*** of R & H, as it was known from the beginning (April 1939 – price sixpence!) right through to the final edition of R, TV & H in March 1965, before it disappeared forever with the change of name to EA.

For the first time ever, complete and in one handy DVD, every article and every issue is covered.

If you're an old timer (or even young timer!) into vintage radio, it doesn't get much more vintage than this. If you're a student of history, this archive gives an extraordinary insight into the amazing breakthroughs made in radio and electronics technology following the war years.

And speaking of the war years, R & H had some of the best propaganda imaginable! Even if you're just an electronics dabbler, there's something here to interest you.

- **Every issue individually archived, by month and year**
- **Complete with index for each year**
- **A must-have for everyone interested in electronics**

ONLY $62.00 +$10.00 P&P

Exclusive to: SILICON CHIP

Order now from www.siliconchip.com.au/Shop/3 or call (02) 9939 3295 and quote your credit card number.

Fancy a quick aerial taxi ride to the airport . . . or perhaps to a fancy restaurant? That dream may become a reality sooner than you think. Some very large companies, including Airbus, Bell Helicopter, Boeing, Daimler, Intel, Toyota and Uber, as well as many smaller ones, are involved in the development of aerial drone taxis. And some are planning to have that taxi service available as early as 2020!

DRONE TAXIS

Kitty Hawk's "CORA" – now flying in trials in New Zealand (see panel page 23). Courtesy www.kittyhawk.com

By Dr David Maddison

Almost two years ago (August 2016) we looked at Personal Flight Vehicles and their future (www.siliconchip.com.au/Article/10035). In that time, some have disappeared completely, some are *still* in planning and some are actually in production.

But most of those featured were not intended for commuter use, nor did many have the option of operating autonomously.

So we thought it opportune to look at the subject again, with particular emphasis on aircraft intended for public passenger use.

Based on quadcopters

These vehicle are primarily based on the familiar quadcopter or other multi-rotor formats used for hobbyist and professional photographic "drones" or more correctly, unmanned aerial vehicles.

Quadcopters (four rotors) or other multi-rotor aircraft such as hexacopters (six) or octocopters (eight) are an attractive and potentially cheaper option than helicopters for commuter use, for a couple of reasons.

They are mechanically much simpler, as their blades are usually fixed pitch (rather than variable pitch) and they have a potentially smaller landing footprint than helicopters of the same passenger capacity. They also usually use electric motors for propulsion, which are easier to maintain than internal combustion motors.

Some of the first attempts at vertical flight in the early years used multi-rotor craft similar to quadcopters but they were mechanically complex and very difficult, if not impossible, to effectively control.

The advent of high speed computers, three-axis accelerometers and solid state gyroscopes now enable these aircraft to be controlled with simple commands, eg, speed, yaw, pitch and roll that are translated into complex commands to control the aircraft.

In this article we will survey some of the large number of passenger drones now under development.

Note that while many companies have passenger drones in development, relatively few have flown prototypes and many will inevitably fail to survive.

Some of the illustrations shown are artist's impressions; very few actually show the aircraft in flight.

Battery Charging

One major problem yet to be fully solved with electric aircraft and passenger drones in particular is the length of time required to recharge their batteries. Most passenger drones will be used like taxis and therefore will have a large number of relatively short trips with battery recharging required after each trip.

As an example, a trip of ten minutes might require a few hours to recharge the batteries. This will adversely affect the economics of operation and one solution may be a hybrid system with a liquid-fuelled generator to recharge the batteries in flight or a replaceable battery pack system.

Uber has partnered with ChargePoint (www.chargepoint.com/), a company that makes electric vehicle infrastructure, such as charging stations, to develop a standardised rapid charging connector that will fit any electric VTOL vehicle that uses its Uber Elevate Vertiports (see below). The system is planned to be ready by 2020.

Uber vision for the future showing various flight paths of Uber Air vehicles around a city.

Airbus CityAirbus

The CityAirbus by Airbus (www.airbus.com) is designed for an air taxi role and will carry up to four passengers. Initially there will be a pilot but the aircraft will operate autonomously once regulations permit.

Eight propellers and motors are used and in each ducted fan nacelle there are two motors and two fixed pitch propellers.

The motors are Siemens SP200Ds with an output of 100kW each. There are four battery packs with a combined capacity of 110kWh, with a total power delivery of up to 560kW.

The aircraft can cruise at 120km/h with an endurance of 15 minutes. So it has a range of up to 30km. Unmanned flights are expected to start at the end of this year.

Airbus Pop.Up

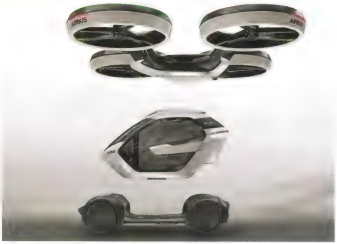

This is a demonstration concept only and not intended to be built. It is a joint exercise between Airbus engineers and automotive engineers at the Italian design company Italdesign. The concept has either an automotive "undercarriage" or a quadcopter "over-carriage" attached to a common passenger module. The module can also be carried by other modes of transport such as rail.

A video "Pop.Up" may be viewed at siliconchip.com.au/link/aajf

Airbus Vahana

Airbus Vahana prototype first test flight which occurred on January 31, 2018 in Oregon, USA. Another flight occurred the next day.

A^3 by Airbus (www.airbus-sv.com) is the advanced projects and partnerships division of Airbus in Silicon Valley, California. The single-seat Vahana has eight motors and propellers on two tiltable wings. The wings rotate for vertical take-off and rotate again for forward flight. It is 6.2m wide, 5.7m long, 2.8m high and has a maximum take-off weight of 745kg.

Its cruise speed is 175km/h and each motor is rated at 45kW. The Vahana is equipped with a ballistic parachute as a safety measure. Video: *"Airbus Vahana Flying Taxi"* siliconchip.com.au/link/aajg

Artists impression of the Vahana when fully developed.

AirSpaceX

AirSpaceX (http://airspacex.com) [not related to Elon Musk's SpaceX] is developing the MOBi 2025 which carries a range of modules for different purposes such as passengers or freight.

It will have a range of 115km and a cruise speed of 241kph. It will operate either autonomously or with a pilot.

A TEDx talk about eVTOL flight by Jon Rimanelli, founder of AirSpaceX: *"Traffic is taking over our lives. The solution is to look up. | Jon Rimanelli | TEDxDetroit"* siliconchip.com.au/link/aajh

AirSpaceX MOBi 2025. It has a range of modules for different purposes such as passengers or cargo or specialised modules for other purposes such as military surveillance.

Another concept by AirSpaceX is the MOBi One. This electric passenger drone will have a range of 104km, cruise at 240km/h with a maximum speed of 400km/h, a passenger capacity of 2-4 and be capable of piloted or autonomous operation. It will be 10m long, 12m wide and 3m tall. Production is expected to start in 2020.

See video: *"Mobi-One: AirSpaceX's autonomous, electric air taxi lands in Detroit"* siliconchip.com.au/link/aaji

AirSpaceX MOBi One concept.

Multi-rotor flight mechanics

In a conventional winged aircraft, variations in roll, pitch and yaw are made with aerodynamic control surfaces but in a multi-rotor aircraft (which usually lack control surfaces), these variations are effected by altering the rotational speed of one or more propellers.

In a quadcopter, one pair of propellers rotate in one direction and the other pair in the opposite direction.

This is to counteract the tendency of the aircraft to rotate in the opposite direction to the propellers, as would be the case if they all rotated in one direction. In helicopters, this tendency is counteracted by the tail rotor, or more rarely by a contra-rotating pair of main blades.

When the speed of all propellers is increased, the vehicle goes up; conversely when the propeller speed is decreased the vehicle descends.

To make a quadcopter in an "x configuration" roll or pitch pairs of propellers corresponding to the desired direction are sped up. For example, to pitch forward, the speed of the two rear propellers is increased or to roll to the right the two left side propellers are sped up.

Pairs of propellers are matched in speed to prevent the quadcopter rotating due to torque reaction. If the quadcopter is to be deliberately rotated about its yaw axis, opposite pairs of propellers are slowed or sped up (compared to the other pair) which removes the balance against the torque reaction and the quadcopter will rotate about its yaw axis.

In multi-copters with more than four sets of propellers such as hexacopters and octocopters control of the vehicle is similar but with more groups of propellers being controlled.

Aurora eVTOL

Concept of Aurora eVTOL in production form.

Aurora Flight Sciences (www.aurora.aero/evtol), owned by Boeing, is developing the eVTOL passenger drone. It is an electric design with eight propellers for vertical lift plus a wing with a pusher propeller for horizontal cruise. It will carry two passengers including pilot or cargo.

Operational testing is anticipated to start in 2020 in Dallas-Fort Worth, USA and Dubai, UAE.

Uber has partnered with Aurora to be the manufacturer of one of the drones it intends to use for its Uber Air service. Video: *"Aurora Flight Sciences' Electric VTOL Aircraft"* siliconchip.com.au/link/aajj

Subscale demonstrator of Aurora eVTOL aircraft in a test flight. During the this test flight there was a successful transition from vertical to forward flight.
Image credit: Karen Dillon, Aurora Flight Sciences.

Bartini Flying Car

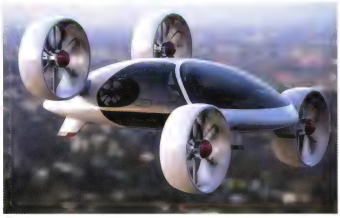

The Russian Bartini.

The electric Bartini Flying Car by Bartini in Skolkovo, Russia (https://bartini.aero/) will be offered either as a two or four-seat model and uses ducted fans for vertical take-off, after which the fan pods are rotated for horizontal flight. It uses variable pitch propellers.

Safety and Regulations

In contrast to helicopters, multi-rotor aircraft cannot autorotate to enable a relatively safe landing in the event of an engine failure – providing there is somewhere safe to land!

And unlike almost any other aircraft, most proposed "passenger" drone designs are unable to glide any distance (if at all) in the event of loss of power.

So additional levels of redundancy for critical aircraft systems such as twin motors coupled to twin propellers, partitioned power sources (ie, all batteries normally contribute to flight but if one bank fails remaining ones can supply power to all motors), redundant flight control systems and even a ballistic parachute may be needed.

A ballistic parachute can be ejected from, then open and save the aircraft at a relatively low altitude; they are becoming more common on light aircraft now.

Regulations

As there are (as yet) few or no regulations allowing for the flight of autonomous passenger drones in most jurisdictions, one way these drones may be introduced is to fly them with pilots first, until regulations can be established for autonomous operations.

This assumes that the vehicles can gain appropriate airworthiness certification, given their radical differences compared to existing certified aircraft types.

In April 2017, A^3 by Airbus (a division of Airbus Industries) in partnership with the Association for Unmanned Vehicle Systems International (AUVSI) [www.auvsi.org/] called for industry co-operation in developing standards for "urban air mobility".

At a workshop held at the Airbus Experience Center in Washington, DC, which included participants from the US Federal Aviation Administration (FAA), the two key regulatory areas considered were certification of autonomous passenger aircraft and air traffic management of such aircraft.

Currently there is no clear pathway to certification of autonomous passenger aircraft, including airworthiness standards for Vertical Take-off and Landing (VTOL), electric propulsion, fly-by-wire systems, software and sense-and-avoid systems.

Such a pathway for certification needs to be developed.

In terms of air traffic management, such aircraft need to be managed in point-to-point autonomous operations in an environment that also includes manned aircraft. Rules would also be required that allow for Beyond Visual Line of Sight (BVLOS) operations and operation over people.

A ballistic parachute (such as that seen here on a small unmanned drone) could save an aircraft that has run out of battery charge or has a motor or control failure. Such parachutes are already used on many manned light aircraft. *Image courtesy Mars Parachutes.*

It is designed to be able to use hydrogen fuel cells when suitable models are available which will dramatically extend its range. The cost is expected to be a relatively low: US$100,000 to $120,000. The company plans to demonstrate flight of a two-seat model later this year (2018) and a possible four-seat model in 2020. Tests will be conducted in Dubai, Singapore or Sydney. Funding for this project is via the Blockchain.aero consortium.

This aircraft has unusually detailed specifications published for it, such as: width 4.5m, length 5.2m, height 1.7m, range 150km or up to 550km with hydrogen fuel cells, payload 400kg, take-off weight 1100kg, lift to drag ratio 4 to 5, propeller loading 146kg/square metre, battery weight 320kg, battery density 200Wh/kg with the possibility of up to 700Wh/kg with hydrogen fuel cells.

Battery capacity is 64kWh with the possibility of up to 224kWh with hydrogen fuel cells, power output 30kW, eight thrusters each rated at 40kW, maximum altitude 3000ft, cruising speed 300km/h, energy used for flight 51kWh, energy used for one minute of hover 5.3kWh, energy used for 30 minutes of cruise 45.9kWh, energy reserve 13kWh, energy used per 1km of flight at cruise 0.30kWh, energy used per minute of cruise 1.5kWh.

A video (computer generated) of this vehicle can be seen at *"Bartini Vision 2020 - Bartini Aerotaxi Is Man's Wheels In the Air for Blockchain community"* siliconchip.com.au/link/aajk

Bell Air Taxi

Bell Air Taxi concept.

Bell Helicopter company (www.bellhelicopter.com/) is also working with Uber to develop an air taxi but is a concept only at this stage. See: siliconchip.com.au/link/aajl

Passenger space in the Bell Air Taxi concept.

Carter CarterCopter Electric Air Taxi

Carter Aviation Technologies in Texas, USA (www.cartercopters.com) are developing an electric helicopter based around their highly efficient "slowed rotor" technology. They are also working in collaboration with Uber to develop a four-passenger drone that can cruise at 280km/h.

It has a rear-mounted rotor that provides an anti-torque force for the main rotor up to a speed of 160km/h. Then the main rotor is disengaged from the engine and the anti-torque rotor turns to become a thruster and thus the aircraft operates like an autogyro.

The main rotor is 10.4m in diameter and the rear rotor is 3.0m. The maximum payload is 363kg. The empty weight of the vehicle is 1451kg. The range of the vehicle is from about 180km to 256km depending on payload and speed. For detailed technical analysis of the design decisions made for this aircraft, see: http://siliconchip.com.au/link/aajm

Cormorant and CityHawk

Taxi, sir? Rendition of the CityHawk on the streets of Manhattan

The Cormorant is being developed by Israeli firm Urban Aeronautics (www.urbanaero.com/ as part of their "Fancraft" series of VTOL vehicles, without external propellers and with internal ducted fans powered by a single gas turbine engine. The autonomous military aircraft is designed to take a 500kg payload of cargo or battlefield casualties.

This payload limit imposed by the international Missile

Artist's conception of CityHawk flying over an urban area. Note the large internal counter-rotating ducted fans and associated vanes which are steerable.

Technology Control Regime which also applies to military drones. See the video at: "*Cormorant UAV (formerly AirMule) Pattern Flight Over Terrain (short)*" siliconchip.com.au/link/aajn

In April 2017 it was decided to design a vehicle based on the Cormorant for civilian use as an air taxi for four people as well as for emergency medical transport use. This vehicle is called the CityHawk. It will use a gas turbine engine at first but will later may be converted to compressed hydrogen at 10,000psi, or battery power.

As of November 2017 the Cormorant was fitted with a Safran Arriel 2S2 735kW gas turbine engine. The plan with the CityHawk is to relocate the engine from the centre to the side to enable a passenger compartment to be installed there and to add an additional engine on the other side for redundancy in the event of one engine failure. A ballistic parachute will be fitted.

Some specifications for the CityHawk are as follows: empty weight 1170kg, maximum take-off weight 1930kg, maximum speed 270km/h, range with four people 150km plus 20 minute reserve, range with pilot only 360km with 20 minute reserve.

Video: "*CityHawk: the flying car you've been waiting for*" https://youtu.be/A1TPviF8YqU

DeLorean Aerospace DR-7

DeLorean Aerospace (www.deloreanaerospace.com/) is developing the patented DR-7 which has two tiltable ducted fans which are horizontal for take-off and are rotated for forward flight, with lift being generated by wings.

Ehang 184

Ehang, based in China, is developing the single-passenger Ehang 184 drone. It is reported to be very close to market, assuming regulatory permission is granted. It is a four arm, eight motor, eight propeller aircraft that weighs 260kg, has a cruise speed of 100km/h, a flight duration of 25 minutes and can carry a payload of 100kg. Recharging takes one hour. There have now been numerous manned flights of this drone (see below).

Note that in the company's own promotional video there is an eight arm, sixteen propeller two passenger model that is also designated an Ehang 184 but there is no mention of this on the company website at www.ehang.com/

See the video at: *"EHANG 184 AAV Manned Flight Tests"* https://youtu.be/Mr1V-r2YxME This has been widely broadcast in recent news bulletins.

Flexcraft

Flexcraft Consortium (http://flexcraft.pt/en/) of Portugal is designing a nine-person plus pilot hybrid electric aircraft. It has two fans in its wings for vertical take-off and a separate motor for forward flight. Quoted range is 926km, with a fuel capacity of 532 litres. Different passenger and cargo modules can be attached.

Look mum, no hands! One of the few drones already flying: the two-seat model of the Ehang 184 in a manned flight test.

The Portugese "Flexcraft" hybrid electric VTOL.

HopFlyt

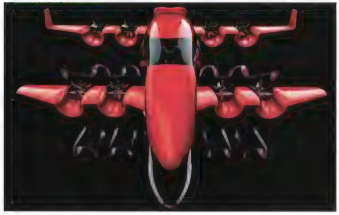

HopFlyt's eight-engine, four-person "Venturi".

Founded in December 2016, HopFlyt of Maryland, USA (https://hopflyt.com/) are developing the four-person Venturi. It has its propellers mounted in venturi channels within tiltable canard wings to give improved efficiency and longer range. It has eight wing channels containing the motors and contra-rotating propellers. Some specifications: weight 815kg, wingspan 8m, length 7m. Video of test of 1/7th scale model: *"HopFlyt Hover Test"* https://youtu.be/oc_hUL0v-3s

HoverSurf Formula

HoverSurf (www.hoversurf.com/), a Russian company with offices in Virginia, USA, are currently making or about to make a quadcopter format "hoverbike" (priced from US$59,000) but their latest project is to make a patented five seat "flying taxi" passenger drone "Formula" which they say they'll place into commercial service sometime this year.

It uses a linear crank-less "free-piston" petrol engine to drive a turbine to produce electric power for propulsion. It has 48 vertical thrusters at four corners plus four horizontal thrusters and foldable wings that can be deployed for forward flight. The company quotes a remarkably affordable US$97,000 for this aircraft. Its range is quoted as 450km with a speed of 320km/h. Video: *"Formula Project by Hoversurf"* https://youtu.be/sxoG3eT6WJ8

HoverSurf's Taxi R-1

I.F.O. Jetcapsule

I.F.O. above a city street. Landing gear folds down to form legs. The capsule is lowered for entry and exit.

The I.F.O. or Identified Flying Object is a proposed design by Pierpaolo Lazzarini (www.lazzarinidesign.net/) for Italian company Jet Capsule. To be powered by eight electric motors, it has an estimated speed of 200km/h with a claimed duration of around an hour. Video: *"I.F.O. The Identified Flying Object"* https://youtu.be/3ysmPJwVZF1

Jetpack Aviation

Jetpack Aviation (www.jetpackaviation.com/) of California, USA was first mentioned in the August 2016 SILICON CHIP article on Personal Flight Vehicles for their personal Jetpack.

Their unnamed multi-rotor aircraft is in very early stages of development but is expected to have 12 motors and propellers mounted on six arms. It will carry one person.

Jetpack Aviation's concept for a passenger drone.

Jetpack are looking at extending flight times beyond the 20 minutes it would have with batteries by the use of a small generator, possibly based on a small gas turbine engine. Two arms will fold so that it can fit in a domestic garage. There will be a number of safety features such as a ballistic parachute and an energy absorbing structure.

See video at *"Jetpack company developing new electric VTOL flying car"* https://youtu.be/Bfo_iOjsbvc

For an interview with one of the inventors, Australian David Mayman, see https://newatlas.com/david-mayman-vtol-flying-car-jpa-interview/47700/

Joby Aviation

California-based Joby Aviation (www.jobyaviation.com/) is developing an electric S2 two-passenger aircraft which has 16 propellers – 12 for vertical lift, which fold back for forward flight and four mounted on the rear of the wings for forward propulsion. This company has received US$100 million in backing from Toyota and Intel.

The aircraft is powered by lithium nickel cobalt manganese oxide batteries and will be capable of flying at 320km/h. The cost of the aircraft is expected to be US$200,000. Video: *"30-sec TECH: the amazing Joby S2 tilting VTOL multi-rotor"* https://youtu.be/AYhs4OFEgDw

Lilium

The German Lilium Jet drone (https://lilium.com/) is a unique five-seat electric jet with a large 300km range and a 300km/h top speed. The first manned flight is envisaged to be in 2019 and it is expected consumer flights will start in 2025. The price for a typical airport to city centre flight such as from JFK Airport to Manhattan is anticipated to be less than a typical road taxi.

It is envisaged that a passenger will request a Lilium Jet directly from their smartphone.

The 36 electric jets work much like turbofan motors in a conventional jet aircraft but the compressor fan at the front is turned by an electric motor rather than a gas turbine. The wing assemblies are rotated for vertical take-off.

There is a ballistic parachute for safety and multiple redundancy in the engines and other flight systems. Video: *"The Lilium Jet – The world's first all-electric VTOL jet"* https://youtu.be/ohig71bwRUE

Passenger Drone

Passenger Drone operating autonomously – without pilot or passenger.

Passenger Drone (http://passengerdrone.com/) is a California-based company developing a two seat autonomous passenger drone, about the size of a small car. It can also be flown manually if desired and has eight motor positions with sixteen motors and sixteen propellers.

When operated in autonomous mode the aircraft is monitored and guided via the company's "Ground Control and Monitoring Center" using the 4G mobile telephone network.

Some specifications of this vehicle are as follows: empty weight including batteries 240kg; maximum take-off weight 360kg, maximum payload 120kg; maximum thrust 560kg; maximum speed 60-70km/h; flight time 20-25 minutes (without range extender); dimensions 4.2m x 2.3m x 1.8m.

No details on the range extender option have been released but it is assumed to be a small petrol or jet fuel-powered generator to recharge the batteries.

A corporate promotional video can be seen at *"Passenger Drone - The most advanced Manned Autonomous VTOL in the World !!!"* https://youtu.be/1Stmyk3R3Hc

Also see *"Passenger Drone First Manned Flight"* https://youtu.be/V3pi4HfQ0Gc . Videos of the avionics system display can be seen at *"PassengerDrone Avionics Demo Video 1"* https://youtu.be/L43JZ3_CgAI ; *"PassengerDrone Avionics Demo Video 2"* https://youtu.be/o4sZIWZFYKc and *"PassengerDrone Avionics Demo Video 3"* https://youtu.be/OvHhK-8LkQA

Sky-Hopper

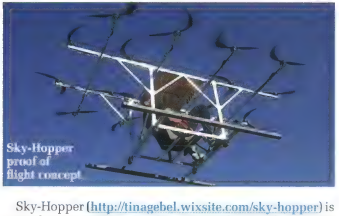

Sky-Hopper (http://tinagebel.wixsite.com/sky-hopper) is a Dutch company in an early start-up phase and currently only have a proof-of-flight concept. Their stated goal is to "develop an eco-friendly electric aircraft that is as safe, reliable, affordable and easy to use as a mainstream car". The skeletal prototype has 16 motors and several flight controllers and it will be developed as autonomous vehicle.

Video: *"Sky-Hopper, first manned flight of electric multicopter"* https://youtu.be/Omv_WdryGRc

SureFly

The Workhorse Surefly (http://workhorse.com/), based in Ohio, USA, is a drone under development that will offer both an autonomous mode and piloted mode. It has a petrol-powered generator based upon an automotive engine as well as batteries that drive eight motors at four locations with eight propellors. It seats two including the pilot and has a kerb weight of 500kg and a maximum take-off weight of 682kg.

The 4-cylinder 2-litre engine drives two 100kW generators, which also keep the batteries charged. They comprise a twin pack each of 7.5kWh which will enable a 5-minute flight time in the event of an engine or generator failure; otherwise the engine and generator will power the eight 3-phase AC motors.

The top speed is about 113km/h with a service ceiling of 4000ft and an estimated range of 113km (70 miles). It has a ballistic parachute as well as redundancy in other critical systems.

Videos: Static ground test, *"Workhorse Surefly CES 2018 Test"* https://youtu.be/8gIBujk7cAE ; *"SureFly Octocopter - Behold The Future"* https://youtu.be/hr8vksAl3jI

The Workhorse Surefly. For storage, the rotor arms can be folded down to the side of the vehicle for storage.

Terrafugia TF-X

Terrafugia (www.terrafugia.com) is designing an autonomous mass market four-seat flying car.

It will have folding wings with wingtip mounted propellers used for vertical flight which later fold back to allow forward propulsion via a rear mounted ducted fan.

One megawatt (1341hp) of power is available at launch via a gasoline hybrid electric drive.

Range is 800km, cruise speed is 320km/h and pricing will be in the range of high end luxury cars. Video: *"The Terrafugia TF-X"* https://youtu.be/wHJTZ7k0BXU

The TF-X in driving mode. . . and flying mode. The wing-tip propellers (used for vertical take-off) are folded back during forward flight and thrust comes from a rear-mounted ducted fan.

Volocopter

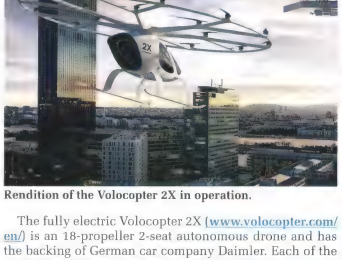

Rendition of the Volocopter 2X in operation.

The fully electric Volocopter 2X (www.volocopter.com/en/) is an 18-propeller 2-seat autonomous drone and has the backing of German car company Daimler. Each of the 18 motors delivers a power output of 3.9kW and it has a cruise speed of 100km/h.

One of the advantages of this design is that it is relatively quiet. It is currently certified in Germany as a light sport multicopter and also as an ultralight.

Its maximum take-off weight is 450kg (including a payload of 160kg) and its range is 27km at the optimal cruise speed of 70km/h. It has a ballistic parachute and redundancy in motors and propellers as well as other safety systems.

Its nine separate battery packs can be fast-charged in under 40 minutes, or slow-charged in under two hours and the packs can also be quickly swapped if necessary.

Videos: *"Volocopter's flying taxi takes off at CES"* https://youtu.be/tODIvUmH6cs and *"Making of Dubai Public Demonstration Flight"* https://youtu.be/ROJ76foyihs

XTI Aircraft TriFan 600

The XTI TriFan 600. Once the plane reaches cruise speed, a door closes over the fuselage-mounted fan.

XTI Aircraft Company, based in Colorado, USA (www.xtiaircraft.com/) is designing the hybrid fuel and electric power TriFan 600, primarily aimed at the business market. As the name suggests this aircraft has three combined lifting and forward propulsion fans.

The company claims this aircraft can be flown under current aviation regulations. The maximum cruise speed will be 556km/h and the range will be 2222km. Cruise altitude will be 29,000ft.

There is space for a pilot and five passengers. Video: *"XTI Aircraft Video 2017 with Slides.mp4"* https://youtu.be/AOapUy1ee64

Y6S

The 2-seat Y6S is being developed by Autonomous Flight Ltd (www.autonomousflight.com/) in the UK. It is a tri-fan design with a tiltable pair of front rotors and wings for forward flight.

It will have a maximum speed of 113km/h, 1500ft cruising altitude and a range of 130km.

Manned test flights will start later this year. A remarkably inexpensive price of US$27,500 has been stated.

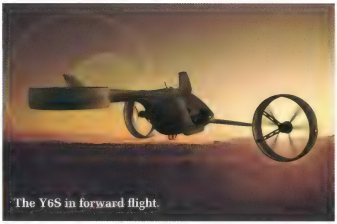

The Y6S in forward flight.

Video: *"'Y6S' drone will be the first in the world to carry passengers and could revolutionise city commutes"* https://youtu.be/CtMPe24-WtA

Uber flight demonstrations in 2020

As stated earlier, Uber are not building any aircraft of their own but are working in conjunction with other manufacturers.

By 2020, Uber will need aircraft such as those mentioned in this article which are in advanced stages of development for its demonstrator flights; vertiport infrastructure to be built; permission to fly in the airspace of the flight corridors between vertiports and appropriate regulations to allow operation of the aircraft and certification of aircraft types.

Initially aircraft will be piloted but they will eventually become autonomous.

By the same year, Uber plan to have overcome three factors:

(1) efficient flights, meaning the passenger drones can fit into existing airspace use;

(2) acceptance of noise made by the vehicles and

(3) acceptance by passengers that the vehicles are safe.

STOP PRESS: Kitty Hawk's "Cora" trialling across the pond . . .

As this issue went to press, information came through that Google Co-Founder Larry Page's company, Kitty Hawk, had received certification to trial their "Cora" self-flying taxi in New Zealand, under approval from the New Zealand Government Department of Civil Aviation.

It had previously been certified as an experimental aircraft by the US FAA.

The fully-electric, two-seat Cora has an 11m wingspan, with twelve wing-mounted rotors to enable vertical take-off and landing (VTOL) plus a single larger pusher-prop to enable it to fly like a normal aircraft once airborne. (see also photo page 14).

Kitty Hawk's "Cora" in flight

Capable of completely autonomous flight, Cora is said to have a range of 100km and a top speed of 150km/h.

New Zealand was chosen as a test site because of its more relaxed regulations for such projects than, say, Australia.

It appears to be supported at high level in the NZ government, with Prime Minister Jacinta Ardern helping to launch the Cora trial.

The company's aim is to have a commercial flying taxi service in operation before 2022. While it can land and take off from a normal runway, Cora doesn't need to do so.

And with a noise level far below that of a helicopter, it will not cause great disruption when it does pop down in built-up areas – in places like building rooftops and car parks.

It is somewhat ironic that Kitty Hawk chose New Zealand for this next phase of aviation: Kitty Hawk is of course the site celebrated as the first manned flight by the Wright Brothers on December 13 1903 – but many in New Zealand claim that local farmer Richard Pearse flew (and landed) a heavier-than-air machine on 31 March 1903, nine months earlier than the Wright Brothers. SC

Swallow a Tiny Capsule to Check Your Gut!

by ROSS TESTER

Researchers at two Melbourne universities have come up with a new way to analyse the gases in your gut, which could provide answers to many medical mysteries. And that information can be transmitted instantly to a smartphone app via Bluetooth.

We're all used to swallowing capsules containing medicine. They're designed to stay "sealed" until they reach a part of the body where the medicine needs to go, then the capsule dissolves.

For example, depending on the capsule skin composition and/or thickness, it might stay intact until it reaches the stomach, or the intestine, etc.

More recently, medical specialists have been using another type of "capsule", one definitely not designed to break down because it contains an ultra-miniature camera, along with a light source and a memory card. They're intended to take photos every so often as they pass right through the system.

After a period of up to few days, they're recovered (use your own imagination!) and the photos are analysed (perhaps a poor choice of word, there) to find evidence of, say, ulcers, blockages, cancers and other nasties.

After suitable treatment, the camera can be used over and over – they're still too expensive to be throw-away items, though that is changing.

Another type of capsule can be used to measure and analyse body temperature, respiration, blood and waste chemistry and so on.

But until now, they've all suffered the same disadvantage – clinicians had to wait until the capsule emerged before the data could be read.

Gas-sniffing capsule

A group of researchers from Melbourne, led by Kourosh Kalantar-Zadeh of RMIT University and Peter Gibson of Monash University has recently published a paper in "Nature Electronics" detailing a tiny ingestible electronic capsule which reports, via radio, the concentration of various gases in the human gut.

When paired with a pocket-sized receiver and a mobile phone app, the pill reports conditions in real-time as it passes from the stomach to the colon.

Such data could clarify the conditions of each section of the gut, what microbes are up to and which foods may cause problems in the system. Until now, collecting such data has been a challenge.

Methods to bottle it involved cumbersome and invasive tubing and inconvenient whole-body calorimetry.

Early human trials of the gas-sniffing capsule have already hinted that

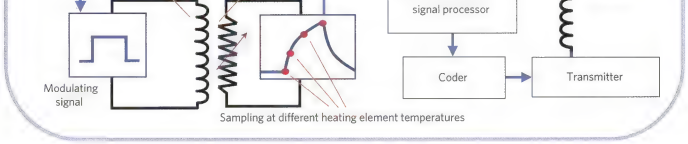

The electronics is packed into a capsule measuring just 26 x 9.8mm. It uses a receiver connected to a smartphone app.

At 26 x 9.8mm, it's larger than typical medicine capsules – but still well within the "comfort zone" of most people.

the pill can provide new information about intestinal wind patterns and gaseous turbulence from different foods.

The capsule is made according to the "000" standard: 26mm in length, with a 9.8mm external diameter.

It includes sensors for CO_2, H_2 and O_2 gases that occur in various aerobic and anaerobic conditions, a temperature sensor, a microcontroller and a 433MHz transmission system plus the button cells which power it.

One end of the capsule contains a gas-permeable membrane that allows for fast diffusion of gut gases.

A non-transparent, polyethylene shell houses the internal electronic components. The polymer shell is machined in two pieces, sealed together using a bio-compatible adhesive.

Interestingly, the capsule was made non-transparent, as volunteers showed hesitation in swallowing capsules with transparent covers, where they could see the electronic circuits inside.

A combination of thermal conductivity and semiconducting sensors, with an extraction algorithm, generate the gas profiles and determine the gas concentration in both aerobic and anaerobic segments of the gut.

The gas-sensing capsule uses a separate receiver which can be linked by Bluetooth to a smartphone or computer. It is not yet in commercial production.

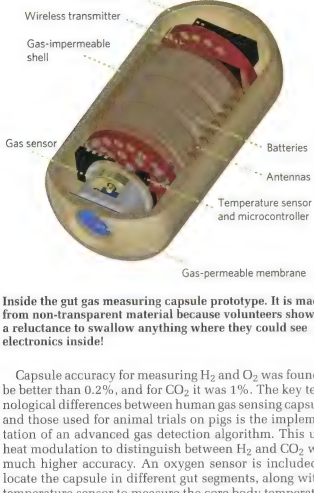

Inside the gut gas measuring capsule prototype. It is made from non-transparent material because volunteers showed a reluctance to swallow anything where they could see electronics inside!

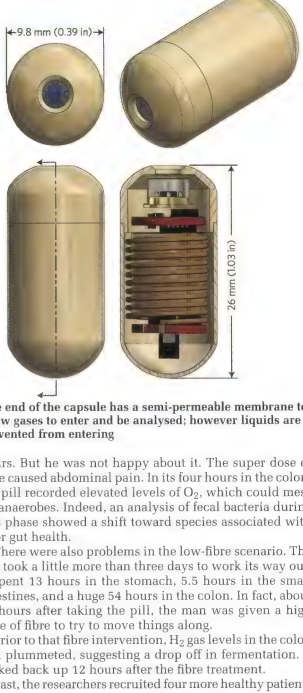

One end of the capsule has a semi-permeable membrane to allow gases to enter and be analysed; however liquids are prevented from entering

Capsule accuracy for measuring H_2 and O_2 was found to be better than 0.2%, and for CO_2 it was 1%. The key technological differences between human gas sensing capsules and those used for animal trials on pigs is the implementation of an advanced gas detection algorithm. This uses heat modulation to distinguish between H_2 and CO_2 with much higher accuracy. An oxygen sensor is included to locate the capsule in different gut segments, along with a temperature sensor to measure the core body temperature and sense the excretion of the capsule out of the body of volunteers (when the temperature drops below 35°C).

The capsules also incorporate membranes with embedded nanomaterials that allow for the fast diffusion of dissolved gases, while efficiently blocking liquid.

Following trials on pigs, the researchers tested the capsule in six healthy people.

For the first, researchers monitored the pill's intestinal trek using ultrasound and linked locations with gas profiles. Overall, it took 20 hours to get from one end to the other, spending 4.5 hours in the stomach, 2.5 hours in the small intestine, and 13 hours cruising through the colon.

In that time, the pill took continuous gas measurements, revealing potentially useful information in addition to gut position.

For instance, CO_2 and H_2 levels peaked in the early hours of its time in the colon while O_2 levels crashed throughout this stretch of the trip.

That correlates with how anaerobic bacteria (those that live without oxygen) inhabit the colon and ferment undigested food into short-chain fatty acids that play significant roles in our health and metabolism.

In the next human trial, the researchers had one person swallow the pill twice. The first time, he ate a very high-fibre diet (50 grams per day) for two days prior to swallowing the pill. Two weeks later, he swallowed another pill after eating a low-fibre diet (15 grams per day) for two days.

In the high-fibre test, the man passed the pill in about 23 hours. But he was not happy about it. The super dose of fibre caused abdominal pain. In its four hours in the colon, the pill recorded elevated levels of O_2, which could mess up anaerobes. Indeed, an analysis of fecal bacteria during this phase showed a shift toward species associated with poor gut health.

There were also problems in the low-fibre scenario. The pill took a little more than three days to work its way out. It spent 13 hours in the stomach, 5.5 hours in the small intestines, and a huge 54 hours in the colon. In fact, about 36 hours after taking the pill, the man was given a high dose of fibre to try to move things along.

Prior to that fibre intervention, H_2 gas levels in the colon had plummeted, suggesting a drop off in fermentation. It picked back up 12 hours after the fibre treatment.

Last, the researchers recruited four more healthy patients to pass the pill. Two ate a high-fibre diet (though not quite as high as the first trial), while the remaining two ate a low fibre diet. This showed similar patterns seen in the earlier trials.

In an accompanying editorial, mechanical engineer Benjamin Terry of the University of Nebraska-Lincoln concluded that the capsules "have remarkable potential to help us understand the functional aspects of the gut microbiome, its response to dietary changes, and its impact on health."

"It might not be too long before a routine healthcare visit involves a check of your vital signs and a request to swallow a tiny electronic monitoring device," he added. SC

Acknowledgement:
Information based on Nature Electronics, Vol 1, January 2018

EMS Since 1999

LEACH

Reliable partner for electronic contract manufacturing

ElectroneX Meet us:
Booth D29
Sydney Rosehill Gardens 5 - 6 September, 2018

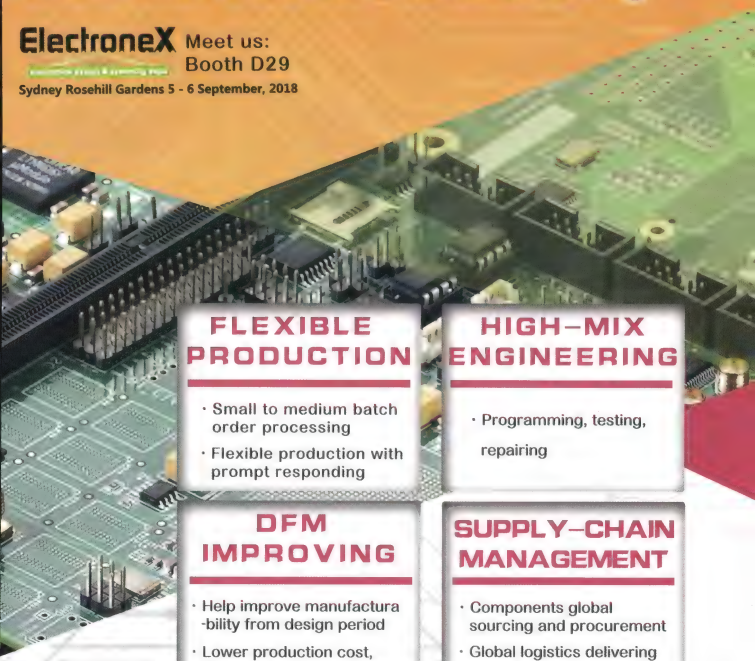

FLEXIBLE PRODUCTION

- Small to medium batch order processing
- Flexible production with prompt responding

HIGH-MIX ENGINEERING

- Programming, testing, repairing

DFM IMPROVING

- Help improve manufactura -bility from design period
- Lower production cost, More reliable circuit boards

SUPPLY-CHAIN MANAGEMENT

- Components global sourcing and procurement
- Global logistics delivering goods around the world

LEACH (HK) Co., Ltd
LEACH (SZ) Co., Ltd
Electronic Contract Manufacturing Turnkey Solution
info@leach-pcba.com
www.leach-pcba.com

Introducing:

Part 1:
by Duraid Madina and Tim Blythman

Our all-new 800W(+) Uninterruptible Power Supply

We'll say it right up front: this will not be a cheap project to build. But if you do build it, we believe you will end up with a UPS that is a better performer than anything else on the market at even two or three times the price. And even then (unlike most commercial units), the design is quite flexible if you wish to expand its already exceptional capabilities. So if you're in the market for a UPS (and who isn't, with the quality [?!] of mains power these days?) you will go a long way to find better value than this.

We searched high and low for a high quality, low-cost case to house the UPS but proved the two terms are mutually exclusive! However, this case is ideal for the job, being pre-drilled and slotted for excellent ventilation.

If you aren't familiar with the concept of an Uninterruptible Power Supply (UPS), it provides a back-up for the mains supply to an important piece of equipment (such as a corporate server or other mission-critical system), so that it won't shut down during blackouts.

The typical use for a UPS is to give plenty of time – a few minutes to perhaps an hour or so – to save work before it's lost – or in large organisations, long enough for a mains generator to be fired up and take over.

Some UPSes are designed to give hours, and occasionally days or even more, of power to enable an enterprise to keep working as if the blackout didn't exist. But these are VERY expensive systems, relying on a large (and even more expensive!) battery bank to keep them supplied.

A UPS is now standard equipment for computer systems in commerce or industry but they are becoming more popular for home or small business.

Laptop computers don't need a UPS as their internal battery does the same job. But the printer or large monitor connected to a laptop will obviously cease working during a blackout. Powered via a UPS, work can continue.

Disaster power

A UPS like the one we are describing could be used in a lot more situations.

For example, perhaps with a few modifications, it could power all your computers, your modem and all your entertainment equipment in the event that you experience a blackout for many hours.

It could keep some or most lights working, allowing an orderly (and safe) exit from deep within otherwise-dark office blocks (sorry, you'll have to use the stairs as the lifts won't be working!).

Or if you have a much longer blackout, it could perhaps run your refrigerator for several days during a long power outage which could occur after a bush fire, a big storm or a flood. That would mean you would not lose any food due to spoilage. And of course, it means that you can keep your mobile phones and notebooks and tablets fully charged so you can stay in contact with the outside world.

Just how long you could run a refrigerator would depend on the power rating of its compressor and the temperature setting. Or perhaps it could allow you to also run a gas heater or oven which requires 230VAC at low power to run the igniter and the control electronics.

So a UPS is an important accessory for a variety of reasons in both business and in the home.

But why would you want to build this one instead of buying a commercial unit? Wouldn't that be cheaper? Not in this case.

Features & specifications

- **Power input: 10A mains plug**
- **Output socket: four switched GPOs**
- **Continuous output power: 800W**
- **Peak output power: 1200W**
- **Battery capacity: 588Wh**
- **Inverter type: pure sinewave**
- **Approximate runtime: 35m @ 800W, 1h @ 500W, 2h @ 260W, 3h @ 175W, 4h @ 135W, 5h @ 110W**
- **Response time after mains failure: <40ms (two mains cycles)**
- **Power interruption when switching back to mains: ~20ms (one mains cycle)**
- **Brownout threshold: 200VAC (adjustable)**
- **Over-voltage cut-out threshold: 260VAC (adjustable)**
- **Battery charging time: approximately 5 hours from flat**
- **Quiescent current: 19W**
- **Status indicators: mains good, running off inverter, battery charging, low battery**
- **PC interface: USB serial monitoring interface (compatible with open-source UPS software)**
- **Audible alert: beeps during a blackout; continuous tone sounded when batteries are nearly flat**
- **Protection: 10A mains fuse, low-battery cut-out with zero battery discharge**
- **Battery longevity: at least 1500 cycles (full discharge)**

$LiFePO_4$ batteries

This UPS has high capacity, very safe $LiFePO_4$ batteries which can be deep discharged without damage – something that can easily occur in a long blackout. Plus it uses an Arduino to monitor and control it.

And while this UPS is conservatively rated at 800W, it actually employs a 24V DC to 240VAC true sinewave inverter which is rated to deliver 1200W or up to 2400W surge (useful to start motors or run a microwave oven for a short period).

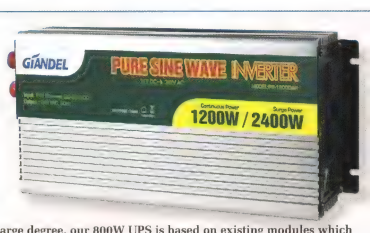

To a large degree, our 800W UPS is based on existing modules which we connect together in an appropriate manner. The photos above show two of the main components: at left is the pair of Drypower 12V, 23Ah batteries which we connected in series for 24V DC, while at right is the Giandel pure sinewave inverter, which is used to power equipment from the batteries when mains power goes down.

The conservative limitation to 800W is determined by the batteries but you could possibly run at the full 1200W continuous output of the inverter for short periods without any problems.

So let's talk about the batteries. Most commercial UPSes come with sealed lead-acid (SLA) batteries. The problem with SLA batteries, apart from being very heavy and bulky, is that they are easily damaged or even destroyed if you allow them to discharge below 11V – and that can easily occur in a typical UPS.

We speak from experience – and we've heard that our experience is not uncommon.

We used to have a UPS on the SILICON CHIP office server, because blackouts are fairly common in the northern beaches of Sydney (we've had quite a few in the last decade). But the one we were using failed because its lead-acid battery was deeply discharged by a long blackout over a weekend.

We replaced it but only a few months later, it went bad again after yet another extended blackout so we just gave up and removed it.

As it uses Lithium iron-phosphate batteries our new UPS design is a lot more robust than that commercial unit so it won't fail in the same manner. They will survive hundreds, if not thousands of blackouts (perish the thought!).

Why did we use lithium iron-phosphate batteries instead of lithium-ion or lithium-polymer? In a word: safety! They are much less likely to catch fire!

While a fire is unlikely with a Lithium-ion or Lithium-polymer battery, it isn't unheard of – and the sudden failure of a battery of this size could be very dramatic. And since this is a DIY project, we can't rule out mistakes being made during construction.

So we wanted the safest possible option.

While some UPSes are able to guarantee no loss of power at all during a blackout, most operate by feeding the incoming mains directly to the load, as long as the mains voltage is OK, but then switching over to inverter operation if the mains waveform goes bad or disappears entirely. Normally this switching is done with a relay or relays and so there is a very brief switch-over period where the load gets no power.

But most devices will not be affected by this. For example, all desktop and server computers these days run from a switchmode power supply, which rectifies the mains to charge a large capacitor or capacitors to around 350V, which then power the switching circuitry.

It takes some time for the filter capacitor bank to discharge to the point where the output voltages are affected. So as long as the switch-over time is short, the supply and thus computer will operate uninterrupted.

Similarly, a motor-driven appliance such as a refrigerator will have some inertia and the loss of mains for a fraction of a second will likely not affect its normal operation.

And most low-cost UPSes do not have a sinewave output when running off the battery. They usually have a "modified square wave" or even a square wave output, since it's easier to produce and the switchmode supply in a computer will run just fine off a square wave (or even high-voltage DC, for that matter).

Our design uses a "proper" sinewave inverter so is usable with a much wider range of devices.

Want more grunt?

Now before we go on to discuss the design philosophy behind this project, we should point out that many aspects can be modified or greatly expanded to suit your particular application.

Want higher power output or much longer run for more extended blackouts? No problem, just substitute a bigger inverter and a bigger (much bigger) battery bank.

Want to operate from solar panels to use it for off-grid power? Again, no problem (we will discuss these various possibilities in a later article).

12V or 24V operation?

Our initial design brief for this project was to have a rated output of at least 500W. So what would be the right battery voltage?

To deliver 500W, a 12V inverter would require an input current of over 40A, which would be harsh on the battery and inverter and require very thick cables. So we started looking for inverters and batteries in the range of 24-48V.

It quickly became apparent that 24V batteries and in-

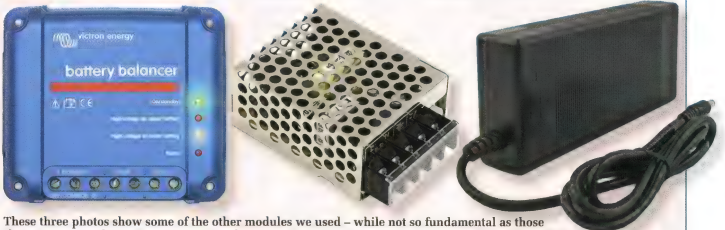

These three photos show some of the other modules we used – while not so fundamental as those shown opposite, they're important nevertheless! At left is the Victron Battery Balancer, required because we used (for economy reasons) two 12V DC batteries instead of a single 24V DC. Even when adding in the cost of the balancer, two batteries are a much better proposition. Centre is the 12V switchmode power supply used to power the Arduino, while at right is the 24V, 5A mains charger for the batteries.

verters were less common and more expensive than 12V types, and 36V/48V batteries and inverters even more so. Two 12V batteries (24V) seemed like the best compromise.

We decided to use two Drypower 23Ah 12.8V $LiFePO_4$ batteries in series, which were supplied by Master Instruments (Cat No IFM12-230E2). We considered using a 25.6V $LiFePO_4$ battery but a similar capacity model cost significantly more than twice as much as the two 12V batteries.

Using two batteries meant that we would need a charge balancer, to ensure that the two battery voltages are kept similar – but even when we include the cost of the balancer, the two 12V batteries are still significantly cheaper.

This battery bank then drives a Giandel 24V/1.2kW pure sinewave inverter which we bought from the Giandel Australia website for $138 plus postage (Cat No PS-1200DAR/24). This is excellent value.

It comes with a pair of battery cables with eyelet lugs and also a remote control that attaches to the unit using telephone-style flat cabling. We hooked this up to an Arduino, which is then able to monitor the inverter status and switch it on and off.

This inverter has a typical efficiency figure of around 90% and it includes a cooling fan and substantial heatsinks so it can deal with the approximately 100W of dissipation at full power.

As already noted, the inverter is rated at 1.2kW (2.4kW peak) but the specified batteries can't supply sufficient current to allow such a high power delivery. They are rated at 35A continuous which works out to around 800W at the output when you take inverter losses into account. That's still handily above the target we had set ourselves for this project.

The 588Wh nominal capacity of the battery bank is specified at a 5-hour discharge rate, which is what our specification of five hours battery life for a 110W load is based on. Curves are not provided to show how capacity diminishes at higher discharge rates but lithium-chemistry batteries normally have a low internal impedance so we believe our moderate de-rating of capacity with increasing load should be approximately right.

We also considered designing a "line interactive" or "online" UPS, where the load is always powered by the inverter and the charger provides the DC current to operate it when mains is available. This avoids the need to switch the load between mains and the inverter and also, poor mains power quality (ie, distorted waveform) is not transferred through to the load.

However, that approach would require a charger capable of around 30A which would be large and quite expensive and it would also be less efficient due to the constant conversion from 230VAC to low-voltage, high-current DC and back to 230VAC. Hence, we decided to design a "standby UPS" instead, as presented here.

By the way, the inverter output is specified as 240VAC; somewhat higher than 230VAC. So when the UPS switches the load to the inverter, the supply voltage will typically increase slightly.

But this is still well within the Australian mains specification of 230VAC+10%,-6% so it should not present any problems. In many parts of Australia, the mains supply is typically above 240VAC anyway.

Charging and mains switching

Having decided on the two most important components of our UPS system, ie, the batteries and inverter, there were still other important details to be determined. These included how the batteries are charged once mains returns after the inverter has been operating (and indeed, are kept charged long-term), how we determine when to switch the output sockets from mains to the inverter output and how that switching is performed.

Charging is quite simple; we purchased a 5A mains charger designed for $LiFePO_4$ batteries and it's permanently wired to the incoming mains socket so that whenever mains is present, it's charging the batteries. Like other Lithium-based rechargeable batteries, $LiFePO_4$ use a constant-current/constant-voltage (CC/CV) charging scheme.

So the charger will deliver 5A to the batteries until the voltage across them reaches 29.2V (14.6V per battery or 3.65V per cell). It will then hold the terminal voltage at 29.2V as the charge current decreases until it reaches a low level, at which point the batteries are considered charged.

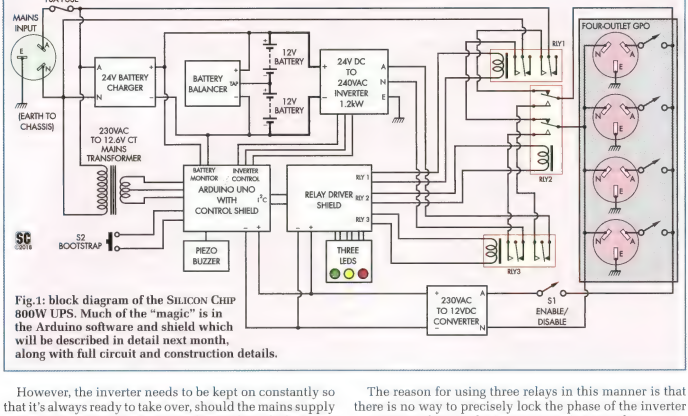

Fig.1: block diagram of the SILICON CHIP 800W UPS. Much of the "magic" is in the Arduino software and shield which will be described in detail next month, along with full circuit and construction details.

However, the inverter needs to be kept on constantly so that it's always ready to take over, should the mains supply cut out. Therefore, it draws several watts from the batteries constantly and the battery voltage will never quite reach 29.2V (it sits at around 29.15V). This should not pose a problem; they are effectively float charged.

Enter the Arduino controller

We're using an Arduino Uno to monitor the mains voltage, via a small mains transformer. The primary of this transformer is connected across the incoming mains supply and the voltage from the secondary is divided down and fed to one of the Arduino's analog inputs via a biasing network which keeps the analog pin voltage in the 0-5V range.

The Arduino is constantly sampling the mains waveform and if it detects an under-voltage or over-voltage condition, or a significant deviation from a sinewave, it immediately switches the output over to the inverter. It only switches the output back to mains when it determines that the mains waveform and voltage are stable and have been for a few seconds.

The switching is accomplished by using three DPDT relays which are controlled via a relay driver shield and the Arduino. Both the Active and Neutral wires are switched.

Relay logic for safe switching

Now refer to Fig.1 which is the block diagram for our high power UPS. It shows how the three relays are arranged. RLY2 is the mains changeover relay and it is arranged so that there is no possible way that the output of the inverter could be connected to the mains. RLY1 is used to connect mains to RLY2 (and on to the output) while RLY3 is used to connect the inverter to RLY2 (and on to the output).

Why do we need three relays when it might seem that only one or two relays might be able to switch the load between incoming mains or the output from the inverter?

The reason for using three relays in this manner is that there is no way to precisely lock the phase of the inverter output waveform to the incoming mains waveform.

While both are nominally at 50Hz, they could be in phase, 180° out of phase or anywhere in between. The phase difference between them is likely to slowly drift over time, due to slight differences in the two frequencies.

So it's entirely possible that the momentary mains voltage could be +350V while the momentary inverter output voltage could be -350V. A single 250VAC-rated relay is not designed to handle 700V DC between two terminals on the same pole. There could be an insulation breakdown and/or major contact arcing and this could destroy the inverter.

By having an extra relay between each AC source and ensuring that both RLY1 and RLY3 are off at the time when RLY2 is switching, we avoid applying any more than the normal mains peak voltage across a single relay.

When the unit is powered off, all the relays are off and so the output sockets are not connected to anything, except for the Earth pins, which are connected to mains Earth and also the unit's chassis.

When the unit powers on, it checks the mains voltage and waveform and assuming they are good, it switches RLY1 on. This connects mains to the output sockets and load(s).

If mains goes bad or disappears altogether, the unit immediately switches RLY1 off. Then, after a short delay, it switches RLY2 and RLY3 on. So the load is briefly disconnected from mains altogether (for around 10ms), then connected to the output of the inverter, which is already running.

When mains power comes good again, RLY3 is switched off and after a brief delay, RLY2 is switched off and RLY1 switched on. Again, there is a brief period where the outputs are not connected to either mains or the inverter. This ensures a safe change-over.

The unit is also designed to perform a sequenced change-

over in this manner should its own power supply fail or when it is purposefully switched off, using a switch mounted on the rear panel. This allows you to, for example, disconnect the UPS from mains so you can move it to a different location without it discharging its batteries.

Indicator LEDs

We've fitted three indicator LEDs on the front panel, so you can tell what is happening. The green LED at far left is on continuously while the output is connected to mains and flashes if mains is not present or not clean.

The yellow LED in the middle lights continuously when the output is being fed from the inverter. While the output is running off mains (and the green LED is solidly lit), the yellow LED will also flash to indicate that if there is a problem with the inverter, such as if the Arduino detects it is not running when it should be.

The red LED at right starts flashing when the battery voltage drops. The flashes become faster as the batteries discharge until it is on continuously when the remaining charge is around 10%.

The unit is also fitted with a piezo buzzer which beeps intermittently while the output is running off the inverter and it changes to a continuous tone when the batteries are nearly flat.

If the battery voltage drops below about 21V, the Arduino switches the inverter and relays off. It also shuts itself down. The drain on the battery becomes almost zero. While these batteries do incorporate their own over-discharge protection, we feel it's still good practice to minimise the load at low voltages.

The unit is able to "bootstrap" itself and power back up when mains returns and this procedure is described below. It can also be manually switched off and powered back on later if necessary.

Powering itself

We need a source of 12V DC to run the three relays and

Parts list – 800W Uninterruptible Power Supply (UPS)

1 vented 3U rack-mount case, 559mm deep [Bud Industries RM-14222+TBC-14253+TBC-14263] [Digi-Key 377-1392-ND; 377-1396-ND; 377-1397-ND]
2 Drypower IFM12-230E2 12.8V 23Ah Lithium Iron Phosphate batteries [Master Instruments]
1 Victron Energy 2x12V Battery Balancer [Master Instruments – www.master-instruments.com.au]
1 Giandel PS-1200DAR/24V Pure Sinewave inverter with cables [www.giandel.com.au]
1 5-7A LiFePO_4 charger [Master Instruments, AliExpress]
1 DETA 6224B Silver Four Outlet Power Point or similar [Bunnings 4430423]
3 12V DC coil, 10A 240VAC cradle relays [Jaycar SY4065]
3 DPDT chassis-mount relay cradles [Jaycar SY4064]
1 12V 1.3A enclosed switchmode power supply [Jaycar MP3296]
1 12.6V CT 7VA transformer [Jaycar MM2013]
4 screw-on equipment feet [Jaycar HP0832]
1 3AG safety fuseholder [Jaycar SZ2025]
1 3AG 10A 250VAC fuse
1 connector to suit battery charger (see text)
1 Arduino Uno or compatible
1 Freetronics 8-Channel Relay Driver Shield [Core Electronics Cat CE04549]
1 Arduino control shield (details next month)
1 green chassis-mount LED with chrome bezel [Altronics Z0222)
1 yellow chassis-mount LED with chrome bezel [Altronics Z0224]
1 red chassis-mount LED with chrome bezel [Altronics Z0226]
3 1kΩ 0.25W resistors
1 NO momentary pushbutton switch

Fasteners

8 M5 x 90-100mm bolts or machine screws
12 M5 x 10mm machine screws
28 M5 nuts
6 M4 x 10mm machine screws
6 M4 nuts
6 M4 shakeproof washers
4 M3 x 32mm machine screws
6 M3 x 15mm machine screws
28 M3 x 10mm machine screws
1 M3 x 6mm machine screw
34 M3 flat washers
34 M3 nuts
4 25mm-long 3mm ID untapped spacers
8 15mm-long 3mm tapped Nylon spacers
4 M3 x 25mm Nylon machine screws

Cables, wires and insulation

1 2-wire mains cable with figure-8 plug*
2 3-wire mains cables with moulded 10A plugs*
1 100mm length of 40A+ rated wire
1 2m length red medium duty hookup wire
1 2m length black medium duty hookup wire
1 2m length yellow medium duty hookup wire
1 1m length white light duty hookup wire
1 1m length yellow light duty hookup wire
1 1m length red light duty hookup wire
1 1m length black light duty hookup wire
1 cable gland to suit 3-wire mains cable [eg, Jaycar HP0732]
1 150mm length 6mm diameter heatshrink tubing
1 50mm length 10mm diameter heatshrink tubing
1 50mm length 16mm diameter heatshrink tubing
1 50mm length 20mm diameter heatshrink tubing
* Can be cut from spare power cables, extension cords or similar

Other hardware

2 Carinya MABF2101 Make-a-Bracket flat plates, 100 x 200 x 1mm [Bunnings 3975858]
6 Carinya MA0003 25 x 25 x 40 x 1mm angle brackets [Bunnings 3975955]
5 adhesive wire clamps
6 small P-clamps
10 4mm crimp eyelets
2 red 6.3mm insulated crimp spade lugs (for the power switch)
30 small black cable ties

5V DC for the Arduino. While we could simply run both off one of the batteries, this would not be ideal as it would present an unbalanced load to the overall battery pack. It would also place a load on the batteries when they are nearly flat.

To avoid this problem, we have fitted a small mains switchmode power supply inside the case and wired this in parallel with the output sockets. So when mains power is present, this powers the Arduino and relays and when running off the inverter, the inverter powers this switchmode converter instead. When the output is switched off, this totally disconnects the Arduino and relay power supply.

So during a short blackout, the Arduino will be powered by the inverter and will simply switch back to mains power once it's restored. But if there's a long blackout and it powers down, when mains power comes back, the output is disconnected. So how does it start back up and switch on the inverter (in case it's needed later) and RLY1?

The answer is that we've added a small relay on the Arduino shield which normally connects the secondary of the mains-sensing transformer to a diode. Current flows through that diode and into the 12V supply bypass capacitors, providing an initial source of power for the module. (Note that this fourth relay is not shown in the diagram of Fig.1 but it is on the control shield).

Once RLY1 is on, that relay is also energised, disconnecting the transformer from the diode. This means that the transformer is not being loaded, so its output is once again a good proxy for the mains voltage.

In fact, this relay is briefly energised before RLY1, giving the Arduino the chance to verify that the mains waveform is clean before the load is connected. The inverter can not necessarily be used at this stage because the batteries are probably flat. But they will start charging as soon as mains returns and will soon be ready for use.

Switching it on without a mains source

We have considered that this unit may also be useful as a source of emergency power. For example, you could use it to back up the power to your fridge so that the contents don't go off during a blackout but you might later decide to unplug your fridge and move it to power some other equipment such as lights, a TV and so on.

In this case, during an extended blackout, you may need to switch the UPS off and then later switch it back on but unless you have a generator, you won't have a source of 230VAC to "bootstrap" it.

So we have added a momentary pushbutton switch to the front panel which briefly connects the nominally 24V battery bank to the input of a 12V regulator which then feeds the Arduino and relays.

Holding this button for a few seconds gives the unit enough time to switch the inverter on and power the load from the inverter. You can then release the button and the unit will continue to run until it is switched off or the battery goes flat.

We've also fitted a rocker switch on the rear panel which allows you to shut down the internal switchmode supply that powers the Arduino and relays. This means you can unplug the UPS from the mains, flick the switch and it will gracefully shut down.

The batteries will remain charged and it can be powered back on later by flicking the switch again and plugging it back into mains, or alternatively, using the pushbutton method described above.

Inverter control

The inverter has a "soft start" feature which ramps its output voltage up over a few seconds when it's switched on. This would be handy in many situations but is unwanted in a UPS because you need to be able to switch over to inverter power in a very short time. But there's also a delay of around 0.5-1 second between pressing the on/off button and the inverter powering up, so clearly we have no choice but to run it constantly, ready to switch over.

We do need to ensure it's shut down when the batteries go flat. While it has an internal under-voltage lockout that's actually very close to the minimum specified voltage for these batteries (20V total, 10V per battery), it isn't that accurate. We should ideally switch the inverter off before the battery voltage drops that low. And we also need to ensure it's switched on when the unit is starting up.

The inverter we've specified is supplied with a small "remote control" box that has a single LED and a pushbutton switch. It's attached to the inverter via a 4-wire telephone style flat cable. The same controls (LED and button) are provided on the inverter itself.

The LED and button share one common connection, with the LED wired between the common terminal and a second wire. A small current flows through this loop when the inverter is powered. The button briefly connects this common wire to a third wire. If the button is held down for around half a second, the inverter starts up or shuts down.

We've interfaced the inverter with the Arduino using two optocouplers. The Arduino drives one to simulate a button press, shorting the two wires to switch power. The second optocoupler LED is connected in place of the LED on the remote control box and pulls an Arduino pin low when the inverter is operating.

A software routine on the Arduino compares the inverter status to the desired status and "presses" the button when necessary to turn it on or off.

This isolation allows the Arduino ground to be connected to the battery negative terminal and it can then monitor the battery voltage using a simple resistive divider (100Ω/10kΩ) to one of its analog pins, allowing it to determine the charge state, both for display purposes and to decide when to shut the inverter down.

Choosing a case

Commercial UPSes of this size are often housed in rack-mounting cases. This is convenient since they can then mounted in a server rack, along with the servers they are protecting. But rack-mount cases can also be fitted with feet and used in a standalone manner.

We spent some time trying to find a low-cost metal box to build the UPS into but in the end, couldn't find a good solution. It was also difficult to find a rack-mount case which would fit all the required hardware (due to the required depth of at least 450mm) but we eventually located one at a reasonable price.

It's three rack units tall (3RU = 133.5mm), the standard 19-inch width and made from aluminium by a US company called Bud Industries. It is supplied as a kit which includes the front, back, sides and hardware while the top, bottom, rack rails and handles are available separately.

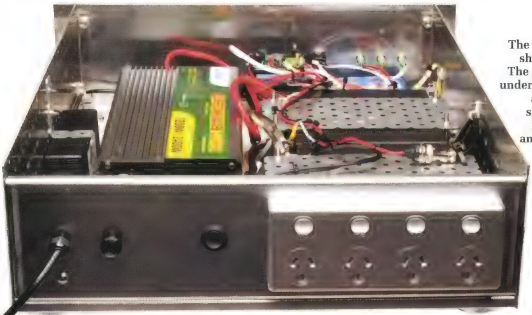

The completed UPS (sans lid!) showing the internal layout. The two batteries are clamped under the punched metal plates at the right while the pure sinewave inverter is on the left. We'll show the layout and construction detail next month. While you might think the silver Deta four-outlet power point on the rear panel seems like gilding the lily somewhat, they're only a couple of dollars dearer than a boring old white one . . . and it really looks the part, matching the aluminium case!

We haven't bothered fitting the rack rails or handles to our prototype but they aren't expensive or difficult to obtain.

Luckily, availability is good; the case is available from US electronics retailers Digi-Key and Mouser and they both offer free express international delivery if you order the required items together (see parts list). We also fitted it with instrument feet from Jaycar as there are quite a few exposed screw heads on the underside.

We've opted for a solid base and vented lid as the inverter and batteries can get quite warm during operation. The side panels have many drilled holes which provides decent ventilation and also makes fitting cable clamps quite easy.

One of the good aspects of using a natural aluminium case such as this one is that it's quite easy to Earth the entire chassis. This is critical for safety; if a mains wire comes loose inside and contacts the case, it will cause the fuse to blow. Otherwise, the case could become live which would be very dangerous.

We have Earthed the rear and bottom panels separately, with the other panels electrically connected via common screws and also direct panel contact.

Sourcing a battery charger

Master Instruments can supply two suitable battery chargers, the Fuyuan FY2902000 (2A) or FY2907000 (7A). The 2A version has a standard 2.1mm inner diameter DC plug so you just need a matching socket while the 7A version uses an XLR plug; suitable sockets are readily available (eg, from Jaycar).

Other chargers are available but they may come with a different plug and so you will need to find a matching socket. Or alternatively, cut the plug off and crimp some eyelet terminals onto the bare wires for direct connection to the battery terminals.

Regardless of which charger you use, it must be designed specifically for $LiFePO_4$ batteries and have a charge termination voltage of 29.2V. While these batteries are quite robust, they may not last very long if regularly charged to the wrong voltage.

Control algorithm

The most critical part of the Arduino software is the "mains-good" detection algorithm. The transformer secondary voltage, which is a proxy for the mains voltage, is sampled 1000 times per second, ie, 20 times per cycle for a 50Hz supply. These samples go into a 32-sample buffer, so there is just over one full cycle worth in the buffer at all times.

To convert this into a meaningful number, we calculate both a root-mean-squared (RMS) average and measure the peak-to-peak voltage.

For a sinusoidal signal, the RMS value is exactly equal to the peak-to-peak value divided by $2 \times \sqrt{2}$, or approximately 2.8284. The peak-to-peak calculation is usually quicker to pick up excessively high mains voltage while the RMS calculation is faster at detecting a brownout or blackout, the latter often being detected within a quarter of a cycle (5ms).

The RMS calculation starts by taking the average of the ADC readings to establish a 'mean' that we can reference the values to. We then add the squares of the differences between our values and the mean.

Then we divide the sum by the number of samples – this is our mean of squares, and its square root is the RMS value, after which the scaling factor is applied to get our actual RMS value in volts.

As soon as the mains voltage reading is found to be out-of-bounds, the relay switching sequence begins, to transfer the load(s) over to the inverter. The unit will not switch the load back to mains operation unless the mains voltage stays within a tighter set of bounds for several seconds.

This increase in the strictness acts as a kind of hysteresis, preventing the unit from switching back and forth if the mains voltage is on the cusp of being too high or too low. The unit will simply switch to the inverter in this case and won't switch back until the mains voltage goes back to a more normal value.

The transformer introduces quite a bit of error into the voltage measurements made by the Arduino (and to a lesser extent, resistor and regulator tolerances). We will provide a calibration process to allow you to set the thresholds more accurately in a later article.

Construction

There will be detailed construction and wiring details in the second article in this series, to be published in the June issue. That article will also have details on the control shield circuitry, including assembly instructions required to build the driver shield. SC

Turn things on or off if they're too fast ... or too slow... etc!

Deluxe Frequency Switch

by John Clarke

Switch devices on or off according to the frequency of just about any sensor signal up to 10kHz. So you can switch something on or off if a sensor signal frequency goes above or drops below a figure which you can easily set.

Features

- Energises a relay when a signal goes above a preset frequency and keeps it on until the signal drops below a second preset frequency
- Adjustable hysteresis can be used instead of setting upper and lower frequencies
- Switching frequency can be from 1Hz up to 10kHz.
- Adjustable switching delay
- Two sets of 5A changeover relay contacts
- Easy pushbutton set-up
- Can be set up on the bench or in situ
- Threshold can be set using a signal generator or frequency meter (eg, DMM)
- On-board signal frequency range indicators
- Power, threshold and relay-on LED indicators

There are many applications for a device of this type. Just some of the things we thought of "off the top of our heads" include:

- Cutting power (or fuel) to a motor if it exceeds a certain speed
- Switching a fan on at low vehicle speeds to provide improved cooling.
- Giving a warning to change gears when the engine RPM is approaching the tacho red line.
- Switching from long to short intake runners at a particular engine RPM to optimise power delivery.
- Switching off a pump if a flow meter records the water flow is outside a specific range.
- Switching on an alarm if wind speed exceeds a certain threshold.
- Applying a brake or feathering blades on suitably equipped turbines.

Of course, there are countless other uses – you're probably thinking of others that suit your particular application.

As long as it has, or can be fitted with a sensor, to provide a frequency which varies with speed, temperature, flow etc, you can use our new Deluxe Frequency Switch. It can do all of this and much more.

It is also much easier to set up than our previous Frequency Switch in June 2007 (siliconchip.com.au/Article/2261) and the main reason for that is that it is based on a PIC16F88 rather than the LM2917 frequency to voltage converter. (That first Frequency Switch was quite tricky to set up!)

Specifications

Supply voltage: 10-16V
Supply current: 20mA with relay off; 60mA with relay on
Signal frequency range: 1Hz to 10kHz
Signal amplitude: >1.4V peak-to-peak
Threshold setting resolution: 20Hz at 10kHz; 1Hz at 2.27kHz; 0.2Hz at 1kHz; 0.002Hz at 100Hz.
Hysteresis: 0-50%
Switching delay: signal period plus 0-500ms
Signal frequency bands: <10Hz, 10-100Hz, 100Hz-1kHz, 1-10kHz

Setting the two frequencies

You need to set up two frequencies, not one as you might have thought.

Why do you need two frequencies? We need to set two frequencies because if the signal from your chosen sensor varies by even a small amount at close to the switching threshold, the relay would be constantly chattering on and off – not good at all. So we set an upper frequency

threshold above which the sensor signal must rise before the relay switches on. And then we set a lower frequency threshold below which the sensor signal must drop before the relay is switched off.

You can set the two frequencies close together or far apart.

Setting the frequencies is dead-easy and there are several methods for doing it. The first method is to feed in your wanted set frequency, say 500Hz, from an oscillator or other source to the sensor input and then press switch S2. Then feed in the wanted lower frequency, say 400Hz, and then press S1.

The second method is arguably even easier. You just set one frequency, say 500Hz, and then use an on-board trimpot (VR1) to set the hysteresis. This will effectively set the lower frequency (down to a minimum of 250Hz in this example) and you can tweak it at the time of installation.

If you don't have an oscillator you could use the real signal that you intend controlling the unit with, so long as you can hold steady it at the required frequency/frequencies for long enough to press the switch(es).

Alternatively, if that's too difficult, you actually can get the microcontroller to generate the wanted frequencies. This second method is more involved than the first and we will describe the procedure later in this article.

Detection time and delay

You can also configure the unit with a switching delay which is adjusted with trimpot VR2 and can be set between zero and 500ms (ie, half a second). This ensures that if the signal frequency only momentarily crosses one of the thresholds, it will not cause the relay to switch.

The input signal frequency must remain at or beyond the threshold for the entire delay time before any relay switching will occur.

Each time the frequency crosses the threshold, the delay time starts again.

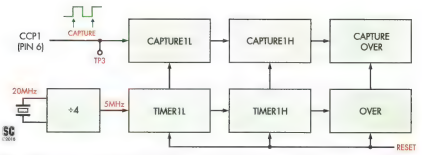

Fig.1: This block diagram describes how the microcontroller measures frequency.

If you prefer switching to happen immediately then set the response time to zero (ie, VR2 fully anticlockwise).

LED indicators

To help in the set-up and installation procedures, we have included indicator LEDs to show when an input signal is present and its frequency range:

- LED2 lights for frequencies between 0.5Hz and 10Hz;
- LED3 lights between 10Hz and 100Hz;
- LED4 between 100Hz and 1kHz;
- LED5 for frequencies between 1kHz and 10kHz and all four LEDs light if the frequency is above 10kHz.

Other LEDs show when the set threshold frequency is reached and whether the relay is on or off.

Relay options

The relay is a double-pole changeover (double throw) type (ie, DPDT) which can switch one or two loads, each up to 5A/48V (8A if you use the specified relay from Altronics).

You have the option to get the relay to switch on if the sensor signal rises above the threshold frequency (set by S2) and switch off if the sensor signal drops below the threshold set by S1.

The alternative is to get the relay to switch on if the sensor drops below the lower threshold frequency (set by switch S1) and switch off if the sensor signal rises above the threshold frequency (set by switch S2). The second mode is activated by installing a link at JP1 on the PCB.

Block diagram

Fig.1 (above) shows how the Deluxe Frequency Switch monitors the signal frequency. The PIC16F88 micro's internal clock is derived from a 20MHz crystal which is driven by an internal oscillator amplifier.

The resulting 20MHz clock signal is divided by four to produce a 5MHz signal which drives an internal 16-bit timer, TIMER1. This comprises two 8-bit cascaded timers, TIMER1H and TIMER1L.

We have implemented an 8-bit overflow counter (OVER) in the unit's firmware. That extends TIMER1 out to 24 bits, so it rolls over every 3.355 seconds [or $2^{24} \div 5{,}000{,}000$]. This equates to an input frequency close to 0.3Hz. Hence, the unit is designed to handle signals from 1Hz and up.

The input signal is fed to pin 6, which is also the Capture/Compare/PWM (CCP) pin. The Capture module hardware in the micro is configured so that on each positive signal transition at this pin (ie, low-to-high), the values of TIMER1H and TIMER1L are copied into the CAPTURE1H and CAPTURE1L registers and an interrupt flag is set.

This then trig-

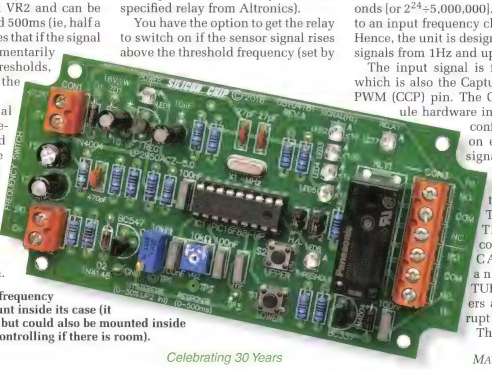

Here's the complete frequency switch, ready to mount inside its case (it suits a UB3 jiffy box but could also be mounted inside the equipment it is controlling if there is room).

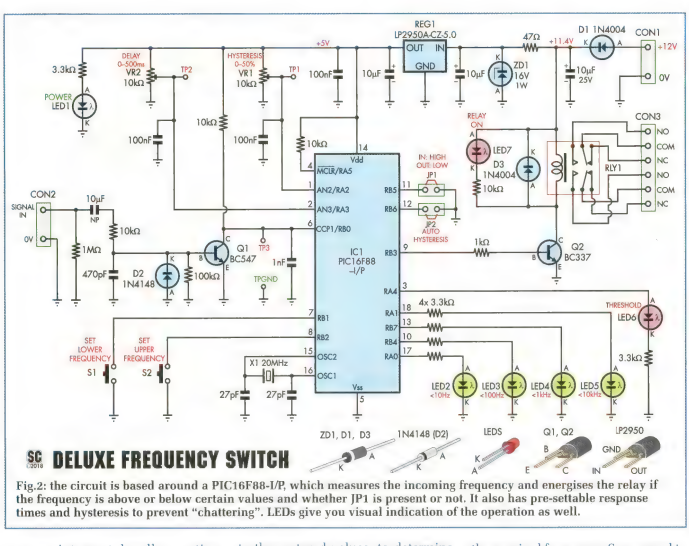

Fig.2: the circuit is based around a PIC16F88-I/P, which measures the incoming frequency and energises the relay if the frequency is above or below certain values and whether JP1 is present or not. It also has pre-settable response times and hysteresis to prevent "chattering". LEDs give you visual indication of the operation as well.

gers an interrupt handler routine which copies the contents of the OVER register into the CAPTURE OVER variable.

The timers and overflow counters are then reset to zero, ready to count until the next input positive going edge.

The captured count represents the number of pulses from the 5MHz clock signal over the period between the two positive input signal edges.

So for example, a 1Hz input signal will have a one-second period between each positive edge. The count value stored will therefore be 5,000,000 (5M). At 1kHz, the period between positive edges is 1ms and the captured value will be 5000.

To calculate the frequency, all we need to do is to perform the calculation F(Hz) = 5,000,000 ÷ value. Or we can calculate the period as P(s) = value ÷ 5,000,000.

But in reality, the micro just has to convert the upper and lower threshold settings to these same count units and then compare the counter values to those stored values, to determine whether either threshold has been crossed.

On-board frequency generation

Where the microcontroller produces an output frequency for you to measure during adjustment as per setup method on page 41), pin 6 (CCP1) is configured differently. Rather than being in Capture Mode, with pin 6 as an input, it is used in Compare Mode and pin 6 is an output.

TIMER1 is still driven with the same 5MHz signal but the TIMER1L, TIMER1H and OVER registers are preloaded with values calculated from the frequency to be produced. Each time OVER register overflows, the pin 6 output toggles and new values are loaded into the TIMER1L, TIMER1H and OVER registers.

Because pin 6 toggles each time the counters overflow, the output frequency would be half what you might expect based on the period value for the required frequency. So we need to divide the period by two to give two separate half periods.

This means there will be an error whenever an odd period value is used, since dividing it by two will yield a remainder of one.

To solve this, and avoid the inaccuracy, two different pre-load values are used. They are used alternately to load into the TIMER1L and TIMER1H registers. So the duty cycle will not quite be 50% but the frequency pro-

TP1 voltage (adjusted with VR1)	Hysteresis when setting upper threshold
5V	50%
3.75V	43%
2.5V	33%
1.25V	20%
625mV	12%
312.5mV	6%

Table 1: Hysteresis setting versus voltage at TP1.

duced will be accurate.

The values from each of the separate period values are loaded into the TIMER1L, TIMER1H and OVER counters alternately. At the same time, the output at pin 6 is changed in level.

For those interested, the values to pre-load into TIMER1L, TIMER1H and the OVER variable are calculated as $2^{24} - (5{,}000{,}000 \div f\,(\text{Hz}) \div 2$, with the alternative value being one higher in cases where $5{,}000{,}000 \div f$ Hz is odd.

Circuit description

The full circuit shown in Fig.2 is based on microcontroller IC1, a PIC16F88. This monitors the input frequency, jumper state (JP1 and JP2), switch state (S1 and S2) and trimpot settings (VR1 and VR2). It also drives the frequency LEDs (LED2-LED5), threshold LED (LED6) and the relay coil (RLY1) and its associated LED (LED7) via NPN transistor Q2.

Power is fed in via CON1 and the supply is nominally 12V DC. Diode D1 provides reverse polarity protection and its cathode connects directly to the positive terminal of the relay coil, applying a nominal 11.4V to it as well as to the 5V regulator, REG1 and it powers the rest of the circuit.

A 10µF electrolytic capacitor is used to filter the supply voltage and transients are clamped using a 16V zener diode (ZD1), with the peak current limited by the series 47Ω resistor.

The supply is further filtered by another 10µF capacitor and then REG1 reduces the 11.4V supply to 5V for IC1 and input conditioning transistor Q1. The power LED, LED1, is connected across the 5V supply with a 3.3kΩ series current-limiting resistor.

The input signal is fed into CON2 and it's AC-coupled via a 10µF capacitor and 10kΩ resistor to the base of Q1. The 470pF capacitor filters any transients while diode D2 clamps the base voltage at -0.7V for negative excursions. Q1 inverts and amplifies the signal, suitable for the capture compare input (CCP1) at pin 6 of IC1.

Frequency measurement modes

When the micro is configured to generate frequencies for setting the upper and lower thresholds, the output signal appears at pin 6 and TP3. For this to work, there must be no input signal at CON2 and this means that Q1 is biased off and it will not load the output signal from pin 6.

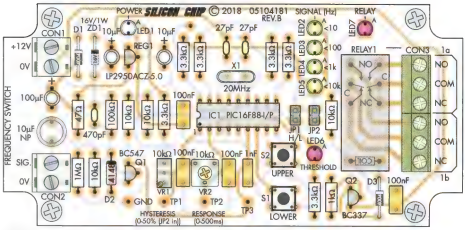

Fig.2: component layout for the Deluxe Frequency Switch with a matching photo below. We suggest using an IC socket for IC1 – and make sure when you place the connectors, their wiring access holes all point to the outside of the PCB.

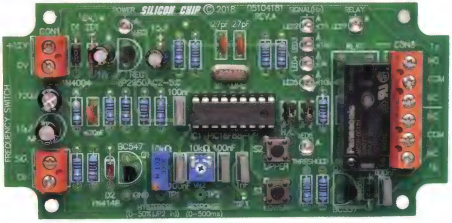

20MHz crystal oscillator X1 is connected to IC1, between its CLKO and CLKI pins, to allow for accurate and wide-ranging frequency measurements. The MCLR-bar reset input is tied to the 5V supply via a 10kΩ resistor to provide a power-on reset for the microcontroller.

Internal pullup currents within IC1 hold the RB1 and RB2 inputs high when switches S1 and S2 are not pressed and similarly, are enabled for the RB5 and RB6 inputs which are connected to jumpers JP1 and JP2. These inputs are pulled low if a switch is pressed or jumper plug inserted and this can be sensed by IC1.

Output pins RA0 (17), RB4 (10), RB7 (13) and RA1 (18) drive signal indicators LED2-LED5 via 3.3kΩ current-limiting resistors at around 1mA each. Similarly, output RA4 (pin 3) drives the threshold LED, LED6. The RB3 output (pin 9) switches transistor Q2 on when it goes high. This transistor in turn switches on the relay. Diode D3 quenches back-EMF from the coil as Q2 is switched off.

LED7 is also switched on when the relay is powered. It's wired across the relay coil and uses a 10kΩ series resistor due to the higher voltage (11.4V). It provides the same current to LED7 as for the other LEDs.

Trimpots VR1 and VR2 set the default hysteresis and delay time and both are connected across the 5V supply, with their wipers connected to analog inputs AN2 (pin 1) and AN3 (pin 2) respectively. The voltages at these pins are converted to digital values using IC1's inbuilt 10-bit analog-to-digital converter (ADC). The 100nF capacitors between each of these two pins and ground provide a low-impedance source for the ADC during conversions.

Construction

The Deluxe Frequency Switch is built on a double-sided PCB coded 05104181 and measuring 102 x 58.5mm. It will fit in a plastic utility box measuring 129 x 68 x 43mm.

Follow the overlay diagram, Fig.3, when installing the parts. Fit the resistors first. The colour codes are shown

overleaf but we recommend that you use a digital multimeter (DMM) to check the values before soldering them.

Diodes D1, D2, D3 and ZD1 are next and these need to be inserted with the correct polarity, with the striped end (cathode, k) oriented as shown in the overlay diagram. Diode D2 is the 1N4148 type while D1 and D3 are 1N4004.

Parts list – Deluxe Frequency Switch

1 double-sided PCB coded 05104181, 102 x 58.5mm
1 DPDT 12V DC coil relay (RLY1) [Jaycar SY-4052 (5A), Altronics S 4270A (8A)]
2 2-way screw terminals with 5.08mm pin spacing(CON1,CON2)
2 3-way screw terminals with 5.08mm pin spacing (CON3)
2 2-way pin headers with shorting blocks (JP1,JP2)
1 18-pin DIL IC socket (for IC1)
1 20MHz crystal (X1)
2 SPST PCB-mount tactile pushbutton switches (S1,S2) [Jaycar SP-0600, Altronics S 1120]
2 PC stakes (TP GND,TP3)

Semiconductors

1 PIC16F88-I/P microcontroller programmed with 0510418A.HEX (IC1)
1 LP2950ACZ-5.0 low dropout regulator (REG1)
1 BC547 100mA NPN transistor (Q1)
1 BC337 500mA NPN transistor (Q2)
1 16V 1W zener diode (1N4745) (ZD1)
2 1N4004 1A diodes (D1,D3)
1 1N4148 signal diode (D2)
7 3mm LEDs (LED1-LED7)

Capacitors

1 100µF 25V PC electrolytic
2 10µF 16V PC electrolytic
1 10µF non-polarised (NP) PC electrolytic
4 100nF 63V/100V MKT polyester
1 1nF 63V/100V MKT polyester
1 470pF ceramic
2 27pF NP0/C0G ceramic

Resistors & Potentiometers (all 1%, 0.25W)

1 1MΩ 1 100kΩ 4 10kΩ
6 3.3kΩ 1 1kΩ 1 47Ω
1 10kΩ vertical multi-turn trimpot, 3296W style (VR1)
1 10kΩ mini horizontal trimpot, 3386F style (VR2)

We recommend using an IC socket for IC1. Take care with orientation when installing the socket and when inserting the IC. For the test points, we used two PC stakes, one for TP GND and the other for TP3. We left the remaining test points as bare pads so a multimeter probe can be inserted.

Install the two 2-way pin headers for JP1 and JP2 and then follow with the capacitors.

The electrolytic types must be fitted with the polarity shown (long lead to pad marked plus; the stripe indicates the negative side) and note that the 10µF NP capacitor is non polarised and so can be installed either way around.

Next, mount transistors Q1 and Q2 and also REG1. Take care not to mix them up as they come in identical packages.

Trimpots VR1 and VR2 are next to be fitted. They may be marked as 103 instead of 10kΩ. Orient VR1 with the adjusting screw as shown.

CON1 to CON3 can now be installed. CON1 and CON2 are 2-way types and CON3 comprises two 3-way screw connectors dovetailed together. Fit all connectors with the wire entry to the edge of the PCB.

Finally, the LEDs and relay RLY1 can be installed. We placed the LEDs close to the PCB, but they can be mounted higher or mounted off the PCB if you wish, connected with flying leads.

Although presented as a bare PCB, the unit fits in a UB3 Jiffy box. In this case, attach the PCB to the base of the box using spacers. First, mark out and drill 3mm holes for each of the corner mounting holes.

You will also need to drill holes at each end of the box for cable glands. A gland at one end is used for the power and signal wires while a gland at the other end allows the relay contacts to be wired up as required.

Set up

You have several options for setting the unit up. You can set it up before installation using or an oscillator or the actual signal source (if it can be held steady enough) when you install it.

1) Oscillator method: Power the unit up with a 12V power supply wired to CON1. Connect the oscillator to CON2. Set the signal amplitude to 2V peak-to-peak or 0.7V RMS.

Set the oscillator to your desired upper threshold frequency (eg, 500Hz) and press S2. Then reduce the oscillator to set the lower threshold (eg, 400Hz) then press S1. That's all there is to it.

If you want to set a single threshold frequency (ie, the upper threshold) and use the hysteresis setting, fit a link to JP2. Then adjust trimpot VR1 for the required hysteresis (percentage) while you monitor the voltage at TP1. Then set the oscillator for the desired frequency and press S2.

Alternatively, if you want to set a single threshold frequency at the lower threshold and use the hysteresis setting for the upper threshold, fit a link to JP2. Then adjust trimpot VR1 for the required hysteresis while you monitor the voltage at TP1. Then set the oscillator for the lower threshold frequency and press S1.

Table 1 shows some the relationship between the voltage at TP1 and the percentage hysteresis. For example, if you set VR1 to give 1.25V at TP1, the hysteresis will be 20% and the resulting lower threshold frequency will be 20% lower than the frequency you set with switch S2.

Note that you can also set the unit with only one threshold frequency and that will mean the relay will latch on when the signal goes above the threshold and will stay on until the power is turned off.

To set just a single threshold frequency, set the oscillator to the desired frequency and then press S2. Then disconnect the signal from CON2 and wait until the signal LEDs all are off. Then press S1 to set the lower frequency to zero.

No link is required at JP1 if you want the relay to switch on as the frequency rises above the threshold set by S2 (and turns off when the frequency drops below that set by S1).

Alternatively, install JP1 if you want the relay to switch on as the frequency falls below the threshold set by S1 (and turn off when the frequency rises

Using a tacho signal

Say you are using the engine tacho signal to switch the relay if a certain engine RPM is exceeded – say 6000 RPM.

If you have a 4-cylinder, 4-stroke engine, 6000 RPM = 100 revolutions per second. Since this type of engine fires two cylinders per crankshaft rotation, then the threshold should be set to 200Hz [100 x 2].

above the threshold set by S2).

2) Frequency meter method: The advantage of this approach is that you don't need an oscillator but you will need a frequency meter or oscilloscope to measure the frequency appearing at TP3.

To get into this mode, connect your frequency meter or DMM between TP3 and GND.

Switch off power, hold down both S1 and S2 and then switch on the power. The micro then produces a 100Hz signal at TP3.

To adjust this default frequency to obtain your desired upper threshold, press S1 and S2 until it reaches your target. S2 increases frequency, while S1 decreases frequency.

Short presses of the switches will alter the frequency at a slow rate. For faster changes, hold the switch down and the rate will change to a faster rate after two seconds. Continue to depress the switch for another two seconds and the frequency will change at an even faster rate.

This allows you to run through the entire frequency range in less than one minute but still be able to do finer adjustments with brief switch presses.

Having reached your target frequency, insert JP1. Then press S2 to set the upper threshold frequency. Then remove JP1. Then press S1 to reduce the frequency to the lower threshold. Then re-insert JP1 and press S1 to set the lower frequency threshold.

Note the two-step process to set each frequency. In other words, with JP1 out, use S2 and S1 to adjust the frequency to the wanted value, insert JP1 and press S2 to set the upper threshold.

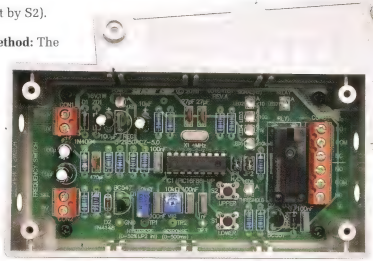

The PCB is designed to fit into a UB3 jiffy box, as shown here – but it could also be "built in" to equipment it is controlling. You may also be able to source the 10-16V DC from that equipment – as long as it isn't turned off by the frequency switch!

Then remove JP1, use S1 & S2 to obtain the lower threshold frequency, insert JP1 again and press S1.

Alternatively, if you just want to set the upper threshold frequency with S2 and have the hysteresis setting made for the lower threshold as set by trimpot (VR2), then you must have a link fitted to JP2 before you start the procedure. Similarly, you can set the lower threshold with S1 and have the upper threshold set by the hysteresis percentage value as set by VR2.

Now turning off the power takes the micro out of the mode whereby it produces an output frequency at TP3. It then reverts to normal operation, monitoring the input frequency instead.

Then fit a link to JP1 if you want the relay to switch on as the frequency falls below the threshold set by S1 (and turns off when the frequency rises above that set by S2).

No link is required at JP1 if you want the relay to switch on as the frequency rises above the threshold set by S2 (and turns off when the frequency drops below that set by S1).

If you want to configure the unit with a switching delay (as described earlier) you need to adjust trimpot VR2. You can set the delay anywhere between zero and half a second.

If you don't want a delay set VR2 fully anti-clockwise.

Installation

Connect the 10-16V DC power source between the +12V and GND inputs at CON1. For automotive installations, automotive-rated wire should be used and the +12V terminal needs to connect to the switched side of the ignition.

That way, the unit only operates when the ignition is switched on and the vehicle battery won't go flat after long periods of being parked.

The easiest way to connect the GND terminal in a vehicle is to wire it to the chassis using a crimped eyelet secured to a convenient screw terminal.

You may need to drill a separate hole in the chassis for this connection, or utilise an existing earth connection.

Wire CON2 to a suitable sensor. This can be the speedometer sensor, an ECU tachometer output, an injector or camshaft position sensor and so on. If you haven't already set the unit up, do so as described above above.

The relay contacts are labelled Normally Open (NO), Normally Closed (NC) and Common (COM).

To switch power to a load, wire one of its supply lines in series between either the COM and NO terminals (so that it's only powered when the relay is energised) or COM and NC terminals (so it's switched off when the relay is energised).

Note that the relay contact current rating is 5A for the Jaycar relay and 8A for the Altronics relay (see parts list).

If a higher current is required, you can switch 12V DC to the coil of a larger relay using RLY1. SC

Resistor Colour Codes

Qty.	Value	4-Band Code (1%)	5-Band Code (1%)
1	1MΩ	brown black green brown	brown black black yellow brown
1	100kΩ	brown black yellow brown	brown black black orange brown
4	10kΩ	brown black orange brown	brown black black red brown
6	3.3kΩ	orange orange red brown	orange orange black brown brown
1	1kΩ	brown black red brown	brown black black brown brown
1	47Ω	yellow violet black brown	yellow violet black gold brown

Small Capacitor Codes

Qty.	Value	µF Code	EIA Code	IEC Code
4	100nF	0.1µF	104	100n
1	1nF	0.001µF	102	1n
1	470pF	-	470	470p
1	27pF	-	27	27p

SAD HAPPY

Because you can't find that difficult-to-get special project part at your normal parts supplier. . . Or perhaps they've discontinued the kit you really want to build. . .

To discover that the elusive bi that you want is stocked in the **SILICON CHIP ONLINE SHOP**! There's a great range of semis other active and passive components, BIG LEDs, PCBs SMDs, cases, panels, programmed micros AND MUCH MORE tha you may find hard to get elsewhere

If it's been published in a recent SILICON CHIP project and your normal supplier doesn't stock it, chances are the SILICON CHIP ONLINE SHOP does!

HERE ARE JUST SOME EXAMPLES (oodles more on our website!)

WeMos R1 D2 WiFi Board
A WeMos R1 D2 Arduino-compatible WiFi board which includes a connector for an external antenna. This is a clone board used in the WiFi Water Tank Level Meter (Feb 2018).....**$15.00**

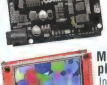

Micromite LCD BackPack V2 complete kit
Includes PCB (green), 2.8-inch TFT touchscreen, programmed micro, SMD Mosfets for PWM backlight control, lid and all other onboard parts (May 2017).....**$70.00**

SC200 Amplifier hard-to-get parts
Includes all power transistors, diodes D2-4, 150pF 250V C0G capacitor, 4 x 0.1Ω and a 6.8Ω 3W SMD resistors **(no PCB)** (Jan 17).....**$35.00**

Micromite Plus LCD BackPack kit
Includes PCB, 2.8-inch TFT touchscreen, programmed micro, 20MHz crystal, laser-cut case lid and other onboard parts (Nov 2016).....**$70.00 ea**

Micromite Plus Explore 100 kit
Includes PCB, programmed 100-pin SMD micro, and all other non-optional onboard parts except the LCD panel (Sept-Oct 2016).....**$69.90 ea**

Micromite Plus Explore 64 kit
Includes PCB, programmed 64-pin SMD micro, crystal, connectors and all other onboard parts (Aug 2016).....**$30.00 ea**

GPS MODULE
Onboard antenna, 1pps output, operation to 10Hz, cable included VK2828U7G5LF GPS/GLONASS.....**$25.00**

5V 0.8W 160mA Solar Panel
Monocrystalline silicon. 99 x 69mm, ~6V open circuit, ~5V full load, two solder pads on the underside of the panel...**$4.00**

5m Water Level Sensor (4-20mA)
Pressure-based water level sensor with a 5-6m lead as used in the WiFi Water Tank Level Meter (Feb 2018).....**$95.00**

Microbridge complete kit
Includes PCB, programmed micro & IC socket, 3.3V LDO, all capacitors, USB socket, pin headers and 1kΩ resistor (May 2017).....**$20.00 ea**

AD9833 DDS module
A Direct Digital Synthesis module using the AD9833 IC and a 25MHz crystal oscillator. (April 2017) with programmable attenuator (green) .....**$25.00** without attenuator (blue) **$15.00**

Elecrow 1A/500mA Li-Ion/LiPo charger board with USB power-pass through
Provides a regulated 5V output at 500mA from the cell, plus a 1A charger and automatic input-to-output pass-through. Supplied with three 2-wire JST 2.0 cables.....**$15.00 ea**

Isolated High-Voltage Probe
Pack of hard-to-get parts including HCNR201-050E linear optocoupler, op amps and HV capacitors & resistors (Jan 2015).....**$35.00**

SiDRADIO parts
125MHz crystal oscillator, mixer, dual gate Mosfet, 5V relay and more **$20.00**
RF Coil Former pack (Oct 2013) **$5.00**

Currawong stereo valve amplifier
Hard-to-get parts including 5 x 39µF 400V capacitors, HV transistors, regulator and blue LEDs (Nov 2014) **$50.00**

2.4GHz WiFi Antennas
Supplied with a matching chassis-mount SMA socket and attached U.FL/IPX connector cable.
2dBi omnidirectional (28mm)....**$10.00**
5dBi (175mm).....**$12.50**

Logic-level Mosfets
Pair of CSD18534KCS N-channel **$5.00**
Or complementary pair of N & P-channe Mosfets (as used in Burp Charger) ...**$7.50**

IPP80P03P4L04 P-channel Mosfet
A high-current P-channel Mosfet with low on resistance in a TO-220 package. Used in th Water Tank Level Meter (Feb 2018) and AM Radio Transmitter (Mar 2018).....**$4.00**

Ultra Low Voltage Bright LED Flasher kit
Includes PCB, LDR, high-brightness blu LED, all SMD parts, an extra capacitor plu extra resistors to change flash frequenc and duty cycle (Feb 2017) **$35.00**

CP2102-based USB/TTL serial converter
Includes a micro-USB socket and 6-pi right-angle header (top) **$5.00**
Includes a USB Type-A socket and 5-pin header with a 5-way female Dupon cable (bottom) **$5.00**

MCP1700 3.3V Low-dropout Regulator
3.3V LDO regulator in a convenient TO-92 package as used in many projects; up to 6V input and 250m output **$1.50**

DS3231-based RTCC module
Real-time clock & calendar module w 4KB EEPROM, I2C interface & mount ing hardware
with LIR2032 cell **$7.50**
no cell **$5.00**

Don't forget: SILICON CHIP Subscribers qualify for a 10% discount on all these items!

YES! We also stock most SILICON CHIP project PCBs from 2010 and even earlier!

Log on now: www.siliconchip.com.au/shop

Using LTspice®

Part IV

Analysing and optimising audio circuits by Simulation

by Nicholas Vinen

We concluded our last tutorial (September 2017) saying that our next LTSpice tutorial would cover simulating op amps and audio circuits. It has been a while coming . . . but here it is!

Simulating audio circuits can be useful for a number of reasons, including:

- *optimising filter component values for the desired roll-off point and minimal passband ripple*
- *characterising complex and/or cascaded filter responses – corner frequency, roll-off rates, out-of-band attenuation, bandwidth limitations, etc*
- *optimising amplifier circuits for stability, bandwidth, etc*
- *measuring frequency response and headroom*
- *checking expected circuit operation*
- *verify DC operating conditions*
- *checking that component voltages, currents, dissipation and heating are within safe operating limits*

This article will cover most of the above tasks and the circuits and techniques presented here can be applied to the remainder (and others we haven't mentioned).

Filter optimisation

There are dozens of different kinds of filters that you might use in an audio circuit, including low-pass, high-pass, band-pass and notch types from simple passive (RC, LC) filters to complex multi-pole active filters or resonant passive filters.

The characteristics of the most simple RC filters can be calculated quite easily, using well-known formulas such as $f(-3dB) = \sqrt{(2\pi \times R \times C)}$ to determine the corner frequency for an RC high-pass or low-pass filter. But as soon as you start working with multi-pole filters or multiple cascaded RC filters, the calculations become much more difficult.

Luckily, simulating such circuits is simple and will quickly give you gain and phase plots.

For example, let's say that we have two cascaded RC low-pass filters with a buffer stage between them. And say they use identical components, so they have the same -3dB corner frequencies and 6dB/octave roll-off. We can use 1kΩ resistors and 1nF capacitors to keep it simple.

So we expect the resulting combination to have a 12dB/octave roll-off but the -3dB frequency of a single filter (159kHz) is now the -6dB point of the combined filter. So what is the new -3dB point?

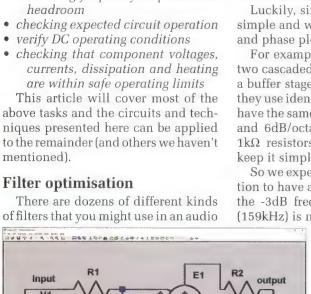

Fig.1: a simple second-order RC low-pass filter drawn up in LTspice, using ideal buffer E1 to isolate the stages. We can then compare its performance to more typical second-order filter circuits to see their pros and cons.

Simulating it

Rather than using an op amp model as the buffer stage between the two filters, we'll use a unity-gain voltage-controlled voltage source. This has the benefit of being simpler to use (no need to wire up supply rails etc), infinite bandwidth, no distortion and no noise.

To set up this simulation, we create a new schematic sheet in LTspice and add and wire up the components as shown in Fig.1. Refer to the earlier articles in this series for details on how to do this. See www.siliconchip.com.au/Article/10677

We already introduced the voltage-controlled voltage source, in this case, component E1. You need to right-click on it and set the "Value" field to 1 so that it operates at unity gain. For the voltage source, right-click on it and click on the "Advanced" button to show all the fields, then set the "AC Amplitude" field to 1V (under "Small signal AC analysis").

We label the input and output nets using the "Label Net" button in the toolbar, for easier analysis later. Finally, select the Simulate -> Run menu option and then switch to the AC Analysis tab and set the type of sweep to Octave, the number of points per octave to 10, start frequency to 10Hz and stop frequency to 10MegHz (other options would be valid but let's stick with these for now).

Do not set the stop frequency to 10MHz, since this will be interpreted

Fig.2: Bode plots showing the frequency and phase response for the intermediate and output notes of the Fig.1 circuit. We can then use cursors to determine their -3dB points and calculate the roll-off rates.

as 10mHz!

Having run the simulation, click on the output node and a plot similar to that shown in Fig.2 should appear (we've also clicked on the junction of C1 and R1 to compare the response of a single stage). The output response is shown in green and the green dotted line is the output phase. The intermediate response is shown in blue. As you would expect, the combined response has a steeper roll-off.

Now, to determine the -3dB point, click on the "V(output)" label at top and cursors appear, along with the box shown at lower right, which contains additional information. Drag the horizontal cursor to the right until the Mag: reading in the box is very close to -3dB and then you will see the corner frequency at left, which is just above 100kHz. Phase and group delay readings are also shown.

Comparing other multi-pole filter arrangements

The problem with cascading two RC filters with a buffer in between to produce a two-pole filter, is that the resulting output impedance pf the cascaded filter is relatively high. But it is possible to build a two-pole filter around a single buffer/gain stage and obtain a very low output impedance. Two common approaches to this are Sallen-Key and Multiple-Feedback filters.

An excellent website for designing such a filter is at: **siliconchip.com.au/link/aajq**

One of the biggest problems with designing this type of filter to achieve a specific response is that you inevitably need components with unrealistic values, such as 4.39kΩ or 1.42nF. With some tweaking, you may arrive at component values which are close to what's actually available.

But that leaves us with two questions: how much does the deviation from ideal values affect the filter response, and which of the two filters topologies is best? LTspice can help us answer both these questions.

For this exercise, let's aim to build a realistic filter with the same -3dB point and roll-off as we determined above with our naive attempt, ie, 102.375kHz and 12dB/octave respectively.

At the website above, we set the filter order to 2, cutoff frequency to 102.38kHz and experimented with the "Desired Rx" value until we got realistic looking values below. This was with a "Desired Rx" value of 2.4kΩ. We then drew up both resulting filter circuits in LTspice, as shown in Fig.3.

There are several important points to note about this circuit we've drawn up. Firstly, we have chosen to use LT1464 op amps as these have 1MHz bandwidth and this will provide a good demonstration of how op amp bandwidth effects filter behaviour.

Also, we have used the Net Label tool to label the supply rails of each op amp V+ and V- and we then added two extra stacked voltage sources, V2 and V3, both set to 5V DC with the junction connected to ground. By labelling the top and bottom V+ and V- as well, we're providing ±5V supply rails for each op amp without cluttering up the schematic.

The output of the "naive" filter has been re-labelled out1 so that we can label the two new filter outputs out2 and out3, for easy comparison. (In case you can't immediately see out2 and out3, they are just above U2 and U3).

U2 is used for the Sallen-Key second-order filter which uses two resistors and two capacitors, all with different values, while the Multiple-Feedback second-order filter is based around U3 and it uses three equal-value resistors plus two capacitors.

The Multiple-Feedback filter is an inverting type while the Sallen-Key is non-inverting; this may be imortant in some applications. While we were able to use equal-value resistors in the Multiple-Feedback filter, that isn't guaranteed to always be the case.

Note that the output of the two new filters is taken from the output pin of an op amp, so the impedance is low and can be fed into another filter network. You would need an extra op amp buffer for the naive filter to achieve the same result.

Now since these are all second-order low-pass filters with the same

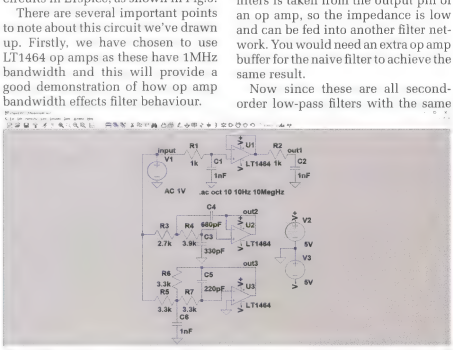

Fig.3: here we're simulating three low-pass filter circuits drawn using op amp models, all with a -3dB point of 100kHz.

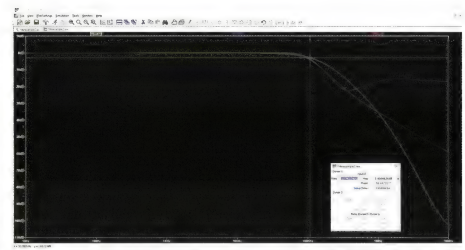

Fig.4: the resulting frequency response plots of the three filter circuits shown in Fig.3 (green=out1, blue=out2, red=out3). While the graphed lines may seem light here, they are quite visible on-screen.

corner frequency, you would expect the results to be very similar but you might be surprised.

Comparing filter responses

We now run the same AC analysis as before but this time, after clicking on the out1, out2 and out3 nets to plot the response, we right-click on the phase axis at right and click the "Don't plot phase" button to de-clutter the resulting Bode plot.

We've expanded the plot to fill the window for increased clarity and the result is shown in Fig.4. The naive filter response is shown in green, Sallen-Key in blue and Multiple-Feedback in red.

The most surprising aspect to this plot is that while both the additional filters have a much faster roll-off above the ~100kHz -3dB point, above 1MHz (the -3dB bandwidth of the op amps), the naive filter actually provides superior attenuation.

And as shown the Sallen-Key filter does a particularly poor job at higher frequencies, with a peak at around -15dB attenuation at 1.8MHz and it's not much better at higher frequencies either.

This is because capacitor C4 couples some of the signal from the input straight to the op amp's output and its limited bandwidth means that it isn't able to prevent that coupled signal from feeding through. (To explain, there is no extra open-loop gain at higher frequencies and that means that negative feedback cannot act to provide a low output impedance).

The Multiple-Feedback filter does a better job because capacitor C5 is a smaller value and there are two resistors, R5 and R7, in series before it, plus C6 will shunt much of the feed-through signal to ground. Even so, you can see that the slope of the red trace changes slightly around 1MHz to be more flat, allowing the blue trace of the naive filter to "catch up" to it at 1MHz.

That's because the naive filter starts with a completely passive RC filter which rejects at least some portion of the signal regardless of the op amp bandwidth. And the op amp's limited bandwidth actually helps us here, since there's no path for the signal to "feed through" it (ignoring parasitic PCB capacitance, which we aren't simulating here although we could add it if we needed to). So it ends up attenuating the signal even further.

Another couple of things to note: both of the new filters give less attenuation of the signal below the -3dB point, ie, they roll-off more quickly which is good if you're going for a "brick wall" type response. And the use of a real op amp has actually pushed the naive filter -3dB point slightly higher, to around 110kHz, which is why the curves don't all meet at one point.

Higher bandwidth op amps

So how does this change if we use a higher bandwidth op amp? That's easy to test; simply delete U1-U3 and replace them with LT1357s which have a gain-bandwidth product of 25MHz. Then re-run the simulation. The result is shown in Fig.5.

All three curves now meet at the design -3dB point of 102.375kHz and it's clear that the Multiple-Feedback filter now gives the best performance, with much less effect on frequencies below 100kHz than the naive filter, a much quicker roll-off above this point and very little change in its rate of attenuation up to 10MHz; just a slight change in the rate of attenuation, which reaches -75dB at 10MHz.

By comparison, the Sallen-Key filter gives virtually identical performance up to 1.4MHz but it reaches a maximum attenuation of -50dB at 2.2MHz, above which is attenuation factor actually falls, giving -40dB at 10MHz.

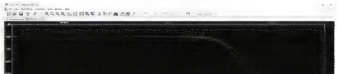

Fig.5: the same frequency response plots as shown in Fig.4 but this time, with 25MHz op amps, giving better results. You can see that the Sallen-Key filter is still less than ideal but its rebound has been pushed to a higher frequency.

Fig.6: a similar plot to Fig.5 but this time up to 100MHz, so we can see how the filters behave between 10MHz and 100MHz.

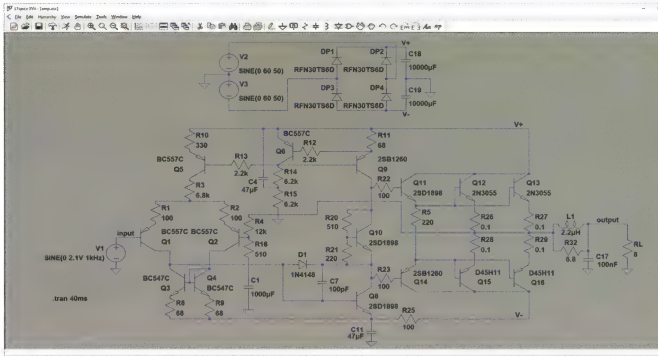

Fig.7: a simplified hifi audio amplifier circuit simulated using components available in the libraries supplied with LTspice.

Its curve crosses the naive filter for a second time at 2.73MHz, with the naive filter continuing to provide attenuation, reaching -72dB at 10MHz.

If we go back to the schematic, right-click on the simulation command (which starts with ".ac") and change the finish frequency to 100MHz ("100MegHz"), we get the plot shown in Fig.6.

This shows that the Sallen-Key bode plot has a peak of -31dB at 35MHz, above which it again begins to slowly roll off. By comparison, the Multiple-Feedback filter does continue to increase its attenuation at higher frequencies although at a reduced rate.

The naive filter overtakes it at 15MHz, where both reach -78.5dB. The Multiple-Feedback filter reaches -100dB at 100MHz while the Naive filter is at -132dB by 100MHz.

Simulating an amplifier with discrete components

Our article on Amplifier Stability and Compensation in the July 2011 issue gave fairly detailed information on using SPICE to simulate an amplifier and test it for stability under difficult conditions, for example, when it is driven into clipping.

Rather than go back over that, we will instead build a simple amplifier circuit in the simulator to analyse the amplifier efficiency, determine the dissipation in the major components and examine how power flows from the transformer through to the loudspeaker load.

We've drawn up a minimalistic hifi power amplifier circuit in LTspice and this is shown in Fig.7. We've used only components from the built-in libraries. The test input signal, a 2.1V peak sinewave is from V1. This is fed into the base of PNP transistor Q1, which forms a differential input pair with Q2. Q2 is connected to the output via a 12kΩ/510Ω divider, setting the amplifier gain to 24.5 times.

NPN transistors Q3 and Q4 are the current mirror load for the input pair while PNP transistor Q5 is the constant current source for their emitters. The differential stage output current flows from the collector of Q1 to the base of Q8, the VAS (voltage amplification stage) transistor which has a 100pF compensation capacitor, to stabilise the amplifier.

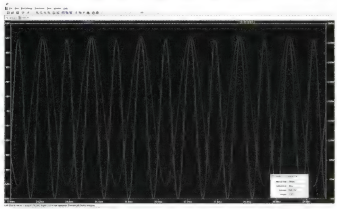

Fig.8: the voltage across load resistor RL is shown in mauve while the dissipation in that resistor (ie, load power) is in green.

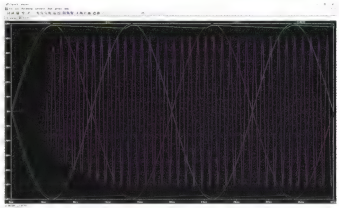

Fig.9: this shows how the amplifier output voltage plus the AC and DC supply voltages behave when power is first applied.

Fig.10: this demonstrates how current is drawn in brief bursts from the simulated transformer secondaries at their voltage peaks.

Q10 and its two base resistors form the Vbe multiplier that sets the bias voltage for the output stage and thus the quiescent current. The bias resistor values were determined experimentally and set the output stage quiescent current to 120mA per transistor pair. PNP transistor Q9 is the constant current source for the VAS while Q6 controls the base bias for both Q5 and Q9.

The output stage consists of driver transistors Q11 and Q14 and power transistors Q12, Q13, Q15 and Q16 (in Darlington emitter follower configuration). These have 0.1Ω emitter resistors and there is an RLC filter at the output to isolate the load (at high frequencies) and ensure stability. The test load is an 8-ohm resistance, RL.

The power supply consists of sinewave voltage sources V2 and V3 which represent the two halves of a centre-tapped transformer secondary (45-0-45VAC). This is rectified by bridge rectifier DP1-DP4 and the supply is filtered by a pair of 10,000µF capacitors.

Examining power supply behaviour

Fig.8 shows the output voltage in mauve. This is a zoomed-in portion of the simulation output since the waveform is clipped initially as the power supply filter capacitors charge up. But if we're interested in looking at the output power, that muddies the water. As expected, the output is a sinewave. The 2.1V peak input has been amplified by the 24.5 times gain to yield peak voltages of just over ±50V.

The green plot is the instantaneous dissipation in the load resistor. This is plotted by holding down the ALT key in Windows and then clicking on the load resistor, RL. Control-clicking the green text at the top ("V(output)*I(RL)") then yields the integral box shown at lower right. This reveals that the amplifier is delivering around 165W average to the load in this condition.

The instantaneous dissipation in RL is 0W when the applied voltage passes through 0V and rises to a peak of around 330W at both the positive and negative sinewave maxima. Note that this is a sine-squared waveform which is why there is a 2:1 ratio between peak and RMS power, not the sqrt(2) ratio you would expect for a normal sinewave.

Fig.9 shows a "zoomed out" version of the simulation plot where you can see the V+ (green) and V- (blue) power rails initially charging up.

This is unrealistically fast as we have simulated a transformer with a zero ohm output impedance; you could add a small series resistance and/or inductance if you wanted a more realistic simulation of amplifier switch-on.

The mauve waveform once again shows the amplifier output and you can see that it is initially clipped by the low supply rail voltages, especially on negative excursions due to R25 and C11, which form an RC low-pass filter for the negative rail at the front end of the amplifier.

These components are important to prevent supply rail ripple due to the load current from affecting the input pair and VAS but they do slow down the amplifier's start-up somewhat. And as shown, they also make the waveform initially clip asymmetrically.

Normally, this would not be a problem as there would typically be a relay between the amplifier and the output terminals with a delayed switch-on to prevent a thump from the speakers at power-up.

The red and cyan traces in Fig.9 are the simulated transformer secondary waveforms and they show how the supply rails are pumped up when the transformer secondary voltages peak and the rails slowly decay, as the load current is drawn during the subsequent mains half-cycles. You can also see how the two halves of the centre-tapped secondary alternately charge up the supply rails.

This is shown in more detail in Fig.10. This time the supply rails are plotted in blue (V+) and cyan (V-) while the simulated secondary voltages are in red and green. Current from voltage sources V2 and V3, representing the transformer secondaries, is shown in grey and mauve.

Ignoring the initial very high current on the first mains half-cycle, the remaining current pulses are semi-realistic and you may be surprised to see that zero current is drawn from the transformer most of the time, with brief peaks to nearly 40A being drawn over a ~1ms period every 10ms.

Calculating amplifier efficiency

If we zoom into the plot so that we remove the initial surge current and then CTRL-click the I(V2) text at the top of the window, this gives us an RMS current of 8.3A.

If we assume a Class-AB amplifier efficiency of 70%, for 165W output we need an input power of 235W and with two 60VAC secondaries, you would expect 2A [235W ÷ 60V ÷ 2] = drawn from each supply rail.

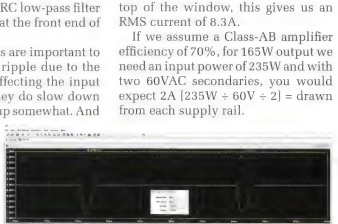

Fig.11: averaging the power drawn from the transformer to calculate the amplifier input power, so we can calculate its efficiency. The circuit is shown larger in Fig.7.

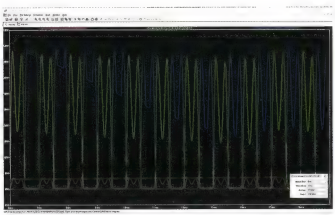

Fig.12: the instantaneous dissipation in the output and driver transistors. These can be averaged to estimate how hot they will get.

The reason for the discrepancy is the fact that current is only drawn for such a short period during the secondary voltage peaks. This means that I^2R losses in the transformer, wiring, rectifier etc will all be a lot higher than you would get with a resistive load on the transformer.

If you think about it, though, it's very rare for a transformer to have a resistive load. Transformers are mostly used to drive rectifiers in similar configurations to this. Hence, transformer ratings tend to be quite conservative as they have to deal with supplying such high peak currents with a low duty cycle.

So does this mean that a huge amount of power is being wasted in the transformer? Not really. It just means the power factor is poor. We can determine the real power drawn from the "transformer" by labelling the output (top) of V2 as V2V and the bottom of V3 as V3V, then re-running the simulation, and plotting the product of current and voltage.

To do this, we right-click on the resulting plot and selecting "Delete Traces", then right-click again and select "Add Trace" and type in the formula: "I(V2)*V(V2V)". Add another trace with the formula "I(V3)*V(V3V)". We can then zoom into a single mains cycle and control-click the formula at the top of the window to get an average reading. The result is shown in Fig.11.

You need to be careful when zooming that you get exactly 20ms (or a multiple thereof) on the horizontal axis or the averaged values will not be correct.

We get a figure of very close to 123W for both V2 and V3. Thus the total power draw of the circuit is 246W. That means the actual amplifier efficiency is 67% [165W ÷ 246W], pretty close to the 70% that we estimated earlier.

Determining device dissipation

We can measure the dissipation in the output transistors, driver transistors and rectifier diodes by alt-clicking them and then control-clicking the formula that appears at the top of the window.

Fig.12 shows the dissipation of one pair of output transistors in green and blue and one of the drivers in red. As you can see, we get a reading of around 17.5W for each of the four main output devices.

Repeating the same exercise gives a dissipation figure of 2W total for the two drivers plus 2W in each of the rectifier diodes, for a total (including the load) of 245W [165W + 17.5W x 4 + 2W x 5], leaving just one watt unaccounted for, most of which turns out to be due to the 0.1Ω emitter resistors.

So this shows how the simulation can help you determine efficiency, calculate device dissipation and so on. It's a good idea to check dissipation for the smaller transistors too.

Depending on the current through each stage, they could potentially be close to their specified limit as they would normally be in much smaller packages than the output transistors.

You could also easily measure the peak and average current in the output devices to check that they are within with each device's capabilities.

Conclusion

While this article has covered a lot of ground, there are still many other audio circuits that we have not discussed and which can benefit from a SPICE simulation but we don't have the space to cover them all.

However, the above should give you an idea of how to "probe" and measure the simulated circuits. It's especially helpful for tweaking component types and values to achieve an optimal result.

For example, you could increase the amplitude of the input sinewave to the amplifier and investigate what happens when the amplifier is driven into clipping.

You could build a simulated loudspeaker load based on resistors and inductors and possibly even include a crossover network, to better explore how the load's reactance affects amplifier operation, stability and efficiency.

All the circuits shown in this article are available for download from the SILICON CHIP website (in a ZIP package) so feel free to experiment, probe, tweak and find out for yourself just how they work and what effect your changes will have.

After all, you can't blow anything up! In fact, why not over-drive things to destruction just to see what happens? It's a simulation: you won't have to buy any new components! SC

ANALOG DEVICES buys Linear Technology

More than a year ago, Analog Devices completed the acquisition of Linear Technology (the owners of LTspice).

LTspice is still available as a free download but you can now access it via **siliconchip.com.au/link/aajo**

You may find that if you have an older installation of LTspice, the automatic update feature no longer works because the URL it fetches is no longer valid. We suggest you download and install the latest version from the above link, which should then be able to keep itself up-to-date.

One major advantage of the new version is that there are now many Analog Devices (ADxxxx) parts available to simulate, along with the existing set of Linear Technology (LTxxxx) parts.

However! We have found the latest version of LTspice (version XVII) to be considerably less stable than the older version that we used (version IV). Hence, you may wish to keep your old version of the software in case these bugs have not yet been fixed. You may notice that some of our screen captures are from the earlier version, for this reason.

Control, Monitor & Save

SMART POWER SOLUTIONS

Jaycar Electronics

NEW 2018

$69.95

DUAL BATTERY CHARGE CONTROLLER MP-3760

This unit will charge TWO completely separate battery banks at the same time. Works with 12V or 24V systems.

- Highly efficient PWM (Pulse-width modulation) charging system
- Provides up to 10A charging current

NEW LOW PRICE!

ORRP $49.95

$39.95

SAVE $10

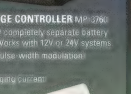

12V 8A WATER RESISTANT PWM SOLAR CHARGE CONTROLLER MP-3780

NEW 2018

$39.95

WIRELESS QI CHARGER MB-3661

Entirely wireless charging method. Supporting fast (10W) & standard (5W) wireless charging.

- LED indicator
- 88(Dia) x 20(H)mm

Suitable for iPhone® 8, 8 Plus, iPhone® X, Samsung Galaxy Note 8 / S8 / S8 Plus, S7 / S7 Edge and Qi-enabled devices.

What's New In Charging?

Wireless & Quick Charge™ are the latest technology when it comes to charging smartphones and tablets. Wireless charging is convenient and neat as it does away with messy cables, simply place your phone on the wireless charger and it will charge your phone. For those needing quick charges on the go, the fast charge technologies such as Qualcomm's Quick Charge™ are able to charge a phone up to 4x faster than conventional chargers and can boast a 1-minute charging time for every 1-hour of usage!

QUICK CHARGE™

Ultra fast charging, up to 4-times faster than a standard charger! Equipped with Qualcomm® Quick Charge 3.0™ technology.

FROM $29.95

240V MAINS

3A SINGLE MP-3443 **$29.95**

5A DUAL MP-3437 **$39.95**

(3A + 2.4A= 5.4A total)

FROM $19.95

12/24V AUTO

Works on cars and trucks.

3A SINGLE MP-3680 **$19.95**

5.4A DUAL MP-3682 **$29.95**

(3A + 2.4A= 5.4A total)

Qualcomm Quick Charge 3.0

WATCH THIS SPACE!

USB TYPE-C WITH POWER DELIVERY

Coming Mid-2018

Due early May

NEW 2018

$69.95

8,000MAH POWER BANK WITH SOLAR RECHARGING MB-3791

Weather, dust, shock resistant IP54 rated case. Features a torch / SOS / caution light. Lightweight and powerful, and even comes with a carabiner to clip to your hiking bag.

- 140(L) x 75(W) x 17(H)mm

Due mid May

$24.95

MAINS AND USB POWER HUB WITH SMARTPHONE CRADLE MS-4103

Provides dual mains outlets as well as two high-power (2.5A) fast USB charging outlets. It even includes a handy cradle to prop up your smartphone or tablet. 1.5m long cable.

- 103(H) x 100(W) x 44(D)mm

NEW 2018

POWERTECH PLUS

NEW LOW PRICE!

ORRP $39.95

$29.95

SAVE $10

CLIP OVER USB WALLPLATE MS-4006

Easily fixed to an existing power outlet without opening and rewiring and adds 2 x USB ports.

- 240VAC 10A

NEW LOW PRICE!

ORRP $39.95

$26.95

SAVE $13

4-WAY LOCKABLE IP66 CIRCUIT BREAKER ENCLOSURE SF-4158

Standard 4-pole ABS enclosure, spring loaded clear front cover with padlock tabs, top, bottom and rear cable entry, DIN rail included, sealed to IP66.

NEW 2018

FROM $49.95

RECHARGEABLE LED WORK LIGHTS

Multiple light modes (high, medium, low & flashing), USB port, battery indicator, charge & discharge protection. Recharge via USB power source.

10W 1000 LUMENS SL-2958 **$49.95**

20W 1800 LUMENS SL-2959 **$99.95**

SL-2959 includes USB adaptor.

NEW 2018

$109

120W 48V 2.5A EDR DIN RAIL POWER SUPPLY MP-3924

Economical and slim solution which adapt to be installed on TS-35/7.5 or 15 mounting rails. Equipped with constant current mode for over-load protection. 3 year warranty.

- Metal housing

NOW $29.95

SAVE $20

5,000MAH RECHARGEABLE POWER BANK MB-3724 **WAS $49.95**

Recharge your smartphone or tablet on the go without mains power.

- 5V, Dual USB output (2.1A +1A)
- 108(L) x 64(W) x 16.5(D)mm

NOW $59.95

SAVE $15

6/12V 8A HEAVY DUTY BATTERY CHARGER MB-3522 **WAS $74.95**

Switch between trickle or heavy duty charge rates. 4-stage LED charge indicators. Overload and reverse battery protection.

2018 Engineering & Scientific Catalogue Out Now!

Catalogue Sale 24 April - 23 May, 2018

To order: **phone 1800 022 888 or visit www.jaycar.com.au**

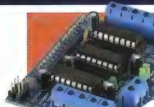

MOTOR CONTROL MODULE

XC-4419

$12.95

5V STEPPER MOTOR & DRIVER SET XC-4458 — $9.95

Controlled by the ULN2003 driver used with any Arduino® or compatible boards via jumper leads. Four-phase LED indicates the status of the stepper motor.

- 30 RPM max speed

24V 5A MOS DRIVER MODULE XC-4498 — $7.95

Accepts Pulse Width Modulated (PWM) input to drive 24VDC loads when connected to an Arduino®. Perfect for many projects such as lighting, DC motors, pumps and solenoid.

- 3.3V & 5V DC operation
- Output current 5A
- 34(L) x 21(W) x 16(H)mm

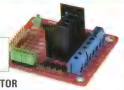

DUAL MOTOR CONTROLLER MODULE XC-4492 — $14.95

Allows full control of two DC Motors or one stepper-motor. An on-board 5V regulator can be used to power your project.

- Motor voltage: 3-30VDC
- Requires six digital inputs

H-BRIDGE MOTOR DRIVER SHIELD XC-4264 — $19.95

Provides PWM (Pulse-Width Modulation) motor output on 2 H-bridge channels to let your board control the speed, direction and power of two motors independently. Perfect for robotics and motor control projects. All outputs are diode and back-EMF protected.

- 60(W) x 54(H) x 12(D)mm

LITHIUM BATTERY CHARGE MODULE XC-4502 — $4.95

Charges a single lithium cell from a 5V supply. Output via solder tabs, input is either via solder tabs or a mini-USB port.

- 27(L) x 19(W) x 5(H)mm

30A CURRENT SENSOR MODULE XC-4610 — $9.95

Outputs a voltage proportional to current passing through the sense pins on the module. Uses ACS712 hall effect sensor.

- Output ratio is 66mV/A
- 31(L) x 13(W) x 15(H)mm

9G MICRO SERVO MOTOR YM-2758 — $9.95

Small enough to connect directly to an Arduino® board. Perfect for use with our pan and tilt bracket (XC-4618 **$4.95**) sold separately.

- 3.5-6VDC. 1.6kg.cm @ 4.8V

12VDC REVERSIBLE GEARHEAD MOTORS YG-2732 — FROM $14.95

Rugged with a 12VDC motor attached to a high-torque gearbox. Use to drive wheels, or even rotate appendages like an arm or head.

12V 70RPM YG-2732 **$14.95**
12V 36RPM YG-2734 **$23.95**
12V 55RPM YG-2738 **$43.95**

RELAY BOARDS

Relays are a great way for controlling power but aren't capable of being directly controlled by a microcontroller such as an Arduino®, but using our relay modules, this restriction is overcome.

- Status LEDs show channel status
- Active high logic
- Screw terminals for easy connection to relay contact
- SPDT relays

1 CHANNEL 5VDC XC-4419 **$5.45**
4 CHANNEL 12VDC XC-4440 **$12.95**
8 CHANNEL 12VDC XC-4418 **$19.95**

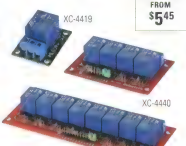

FROM $5.45

LOGIC LEVEL CONVERTER MODULE XC-4486 — $4.95

Provides two bi-directional channels to safely marry 3.3V with 5.0V. Drops straight into solder-less breadboard. Can be soldered into your own PCBs.

- 12-pin DIL package
- 35(W) x 31(D) x 21(H)mm

5V DC TO DC CONVERTER MODULE XC-4512 — $4.95

Capable of providing a stable 5V, from a single Li-Po or two Alkaline cells. Input is via two solder pads, output is via a female USB socket.

- 34(L) x 16(W) x 8(H)mm

DC VOLTAGE REGULATOR XC-4514 — $7.95

Accepts any voltage from 3-34VDC, and outputs any higher voltage from 4-35VDC. Use it to run your 5V Duinotech projects from a 6V, 9V or even 12V Supply.

- Maximum output current 2.5A
- 49(L) x 26(W) x 12(H)mm

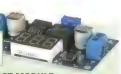

DC-DC BOOST MODULE WITH DISPLAY XC-4609 — $19.95

Can be used to provide higher voltages for your project, such as running 5V Arduino® projects from Lithium batteries.

- Maximum 2A input current without heatsinking
- Solder terminals
- 66(L) x 35(W) x 12(H)mm

AA-0236

DC TO DC CONVERTER MODULES — FROM $24.95

Handy DC voltage converter modules that can step-up or step-down voltages so you can power your devices where a different power source is present.

1.1A STEP DOWN AA-0238 **$24.95**
1.5A STEP DOWN AA-0236 **$24.95**
2A STEP UP AA-0237 **$29.95**

MAINS MOTOR AND LAMP CONTROLLER AA-0346 — $39.95

Used in various mains rated applications including split-pole motor speed control, lamp dimming or soldering iron temperature adjustment.

- 600W continuous 1200W max power.

See website for details.

12V 3A TIMER MODULE AA-0384 — $39.95

A versatile and useful timer module that can be set for periods of 2 seconds to 23 minutes. The start and stop functions are controlled by simple switch inputs and the relay output can control a device of up to 25VDC at 3A.

- Operating voltage: 12-15VDC
- 87(L) x 60(W) x 30(H)mm

MULTI-VOLTAGE REGULATED ADAPTOR MODULE AA-0372 — $9.95

Low-powered DC converter for many applications. Just plug its input into your PCs internal power supply cable and get selectable regulated voltage out from 3 to 15VDC.

- Output current capability: 1.5A
- 63(L) x 24(Dia.)mm

See website for details.

STEP-BY-STEP INSTRUCTIONS AT:
jaycar.com.au/arduino-power-monitor

Power Usage Monitor

With electricity prices rising, it is a good idea to keep an eye on how much power your appliances are using. This power monitor project will allow you to set a notification limit, notifying you by email when the power consumption reaches 50%, 75% and 100% of your set limit. This means you can better monitor and manage your appliance power consumption. No more shocks when you receive your next electricity bill.

NERD PERKS CLUB OFFER
BUY ALL FOR $34.95
SAVE 25%

VALUED AT $46.60

WHAT YOU NEED:

WI-FI MINI ESP8266 MAIN BOARD	XC-3802	**$24.95**
PROTOTYPING SHIELD FOR WIFI MINI	XC-3850	**$4.95**
30A CURRENT SENSOR MODULE	XC-4610	**$9.95**
HOOK-UP WIRE PACK	WH-3025	**$4.95**
40 PIN FEMALE HEADER STRIP	HM-3230	**$1.80**

SEE OTHER PROJECTS AT
www.jaycar.com.au/arduino

Power Your Projects:

$9.95

BREADBOARD POWER MODULE XC-4606
Adds a compact power supply to your breadboard. Power from a USB socket or DC. 3.3V or 5V switchable.

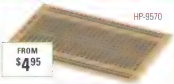

HP-9570

FROM $4.95

BREADBOARD LAYOUT PROTOTYPING BOARDS
Transfer your breadboard design without having to rework it. Includes five holes on each side per row and power rails running the length of the board.
LARGE 59 ROWS/862 HOLES HP-9572 **$9.95**
SMALL 25 ROWS/400 HOLES HP-9570 **$4.95**

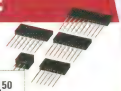

$4.50

ARDUINO® STACKABLE HEADER HM-3208
Build a stackable shield, or make your current shield stackable. Alternatively, shorten the pins to make female headers just like the Duinotech main boards.
INCLUDES: 1 × 10-pin, 2 × 8-pin, 1 x 6-pin & 1 x 2x3-pin (for ICSP).

$149

RASPBERRY PI STARTER KIT XC-9010
Just about everything you need to get started with a Raspberry Pi. Includes Raspberry Pi 3B, acrylic case, power supply and USB cable, book (Programming the Raspberry Pi, Getting Started with Python), microSD card loaded with NOOBS software and getting started guide.

Due early May.

$4.95

9V BATTERY SNAP DC LEAD BATTERY PH-9251
Snap to centre positive 2.1mm DC connector. Works great for Arduinos, development boards, electronic projects and more!
• 0.3m long

$1.75 ea

RN-3411

METAL OXIDE VARISTORS (MOV)
Ideal protection against voltage spikes and transients. Helps prevent damage to sensitive equipment such as microprocessors and digital electronics.
• Range from 10-460VAC, 100-6500

FROM 55¢/m

HEAVY DUTY POWER CABLES
Suitable for 250V wiring. PVC insulation.
7.5A 24 X 0.2mm. WH-3040-WH3042
$0.55/m or **$42/100m roll**
10A 32 X 0.2MM. WH-3050-WH3052
$0.80/m or **$72/100m roll**

$14.95

OFFICIAL RASPBERRY PI CASE XC-9006
Snap-together case with numerous removable panels. Stylish red and white design. Four rubber feet included.

$5.95

3 PIN PLUG PACK CASE HB-5900
Make your own plug in power supplies with our vented case. Complete with earth pin.

$4.95 ea

2.1MM DC CONNECTORS
• 3.0A rated.
PLUG PA-3711
SOCKET PA-3713

$3.95

2.1MM PCB MOUNT DC SOCKET PS-0531
Snap-in, PCB mounted 2.1mm DC power socket with SPST black rocker switch.
• Electrical rating: 5A @ 15VDC

$7.95

COPPER HEATSINK FOR RASPBERRY PI HH-8584
Helps dissipate extraneous heat. Self-adhesive pads for peel and stick use. Pack of 2.

See terms & conditions on page 8.

240VAC:

$59.95

TPLINK SMART WI-FI PLUG YN-8446
Easily manage your household electronic devices anytime, anywhere! Turn on/off. Just connect to your Wi-Fi network and control using the free App.

$29.95

Due mid May

MAINS POWER METER WITH EXTENDABLE LCD DISPLAY MS-6108
Smart design with LCD screen connected to main unit with a 1.5m cable allowing you to take readings from hard to reach places. Displays watts, cost, volts, amps, and CO_2 emission.

$9.95

24 HOUR MECHANICAL TIMER SWITCH MS-6113
Simple and effective for automatically switching your appliances on and off at particular times. Set-up takes mere seconds, then set and forget.
- Override switch
- 10A @ 240V (2400W) max load

$19.95

REMOTE CONTROLLED MAINS OUTLET CONTROLLER MS-6148
Turn any standard mains outlet on and off via remote. Good for switching off hard-to-reach power points.
- Up to 30m range

12VDC:

200A DC WATT METER POWER ANALYSER WITH LCD DISPLAY
All-in-one power meter, voltmeter, amp-hour meter, ammeter and energy meter. Slots between various links of a power system. Check charge going to a battery from battery charger or alternator, solar panel output, charge controller output, health and performance of batteries, evaluate charging efficiency or measure power and energy consumption of any load device with a battery.
- 75A continuous / 200A Max
- Up to 600VDC compatibility

BARE LEADS MS-6190 **$49.95**
WITH ANDERSON CONNECTORS MS-6192 **$59.95**

FROM $49.95

$19.95

DUAL USB SMART CAR CHARGER WITH LCD VOLTAGE DISPLAY MP-3692
With two USB outlets capable of a combined 4.8A, you can charge your devices in minimal time.
- Battery voltage or USB charging current display
- Output: 2.4A x 2 (max)
- Input power: 12-24V

$19.95

CAR BATTERY DISCHARGE PROTECTOR MB-3676
Warns you when battery power is running low & disconnects power through the unit when power gets too low. Plug and play operation, no tools required!
- Max Power Output: 8A
- Connection: Cigarette Lighter
- 95(L) x 35(W) x 155(H)mm

$48.95

DIGITAL DC POWER METER MS-6170
An ideal addition to any low voltage DC system. Features real time display of the voltage, current draw and power consumption. Includes internal shunt.
- 0-20A

NOW $149
SAVE $10

140A DUAL BATTERY ISOLATOR KIT WITH WIRING MB-3698 **WAS $159**
Allows two batteries to be charged from your engine alternator at the same time. *See website for contents.*
- Emergency override feature
- LED status indicator
- 67(L) x 67(W) x 53(H)mm

NOW $299
SAVE $50

4 STAGE 40A DC TO DC BOOST CHARGER MB-3690 **WAS $349**
Capable of taking an 8-16VDC input voltage, and giving a stable, regulated 13.8V/14.4V 4-stage charger output to give your auxiliary battery a full 100% charge.
- Input voltage: 8 - 16VDC
- Output current: 40A max

$9.95

UNIVERSAL BRASS BATTERY TERMINALS HC-4030
Heavy duty, solderless, marine grade brass. Perfect for isolating your battery to prevent battery drain when not in use. Sold in pairs.
SADDLE HC-4030
LUG BOLT STYLE HC-4034
ISOLATING (NEGATIVE POST) HC-4038

$9.95

INOX BATTERY CONDITIONER NA-1420
Removes or reduces sulphation. 92ml pack sufficient for most automotive batteries.

$24.95

12/24V BATTERY TESTER QP-2263
Versatile battery tester for vehicle or vessel batteries.
- LCD panel of voltage as well as LED indication for under/overcharge
- Suitable for 12V and 24V batteries

FROM $39.95 SF-2249

BATTERY ISOLATOR SWITCHES WITH AFD*
Durable and rated for massive output. Protects alternator when switching batteries in and out of the circuit.
2 POSITION SF-2249 **$39.95**
4 POSITION SF-2250 **$49.95**
**AFD - Alternator Field Disconnect*

Due mid May

$19.95

3.7V 18650 2600MAH LI-ION PROTECTED BATTERY SB-2299
Fully protected against overcharge, over-discharge, short-circuit, and over-current to keep the battery in good shape and devices safe.
- Rechargeable

SB-2305

FROM $11.95

3.2V LIFEPO4 RECHARGEABLE BATTERIES
Lithium iron phosphate (LiFePO4) is more chemically stable type of lithium rechargeable cell. Very popular due to increased safety and longer cycle life.
- 600mAh, 1600mAh & 3000mAh available

SB-1723

FROM $2.95

NI-MH RECHARGEABLE BATTERIES
Nickel Metal Hydride (Ni-MH) batteries offer superior features to Nickel Cadmium (Ni-Cd) rechargeable batteries. AA,AAA, C, D & 9V. Nipple or solder tabs.
- Higher current capacities
- High drain performances

$39.95

DUAL CHANNEL LI-ION AND NI-MH BATTERY CHARGER MB-3635
Supports charging of LiFePo4, Li-ion, Ni-MH, and Ni-Cd batteries. Individual charging lanes. LCD feedback.
- Charging Current: 500mA / 1000mA
- 67(W) x 129(H) x 38(D)mm

Multi State Charging States

Smart Chargers have a pre-set charging cycle such as 3, 4 or 9 stages. The charging voltage and current is optimised in each stage to suit the type of battery being charged, this ensure maximum operating efficiency and battery life. Below are some common charging states:

READ THE FULL ARTICLE:
jaycar.com.au/charging-states

DESULPHATION: Pulsing current and voltage, removes sulphate from the lead plates in sulphate batteries.

SOFT START: Charging starts with reduced current until battery voltage reaches a normal condition for charge.

BULK MODE: During this stage the battery is charged to up to 80% capacity, which is the majority of its charge.

ABSORPTION MODE: Completes the charge up to (or close to) 100% at a slower charge rate in order to protect the batteries working life.

RECONDITION MODE: This mode charges at higher voltage to recondition the sulphate and increase battery life.

ANALYSIS: Tests the condition of the battery. If is unable to hold charge it needs to be replaced.

FLOAT: When battery is fully charged, this state maintains a trickle, minimal charge current, to ensure the battery remains fully charged.

PULSE MODE: Maintaining the battery at 95-100% capacity. The charger monitors the battery voltage and injects a pulse to maintain the battery charge.

Multi-State Battery Chargers:

High tech SLA battery chargers for automotive, marine, motorcycle, workshop or industrial use. Capable of recharging the battery and maintaining the charge state indefinitely. Safe to leave connected for months.

$49.95

6/12VDC 1.5A
3 STATE CHARGER MB-3609
Suits all SLA batteries: Wet cell, gell cell and AGM
- Output voltage: 6/12VDC
- Max output current: 1.5A
- Capacity: 6-20Ah
- 110(L) x 58(W) x 46(D)mm

$89.95

6/12VDC 4A
4 STATE CHARGER MB-3611
Uses a microprocessor to diagnose the battery's state of charge. Suits all SLA batteries: wet cell, gell cell and AGM.
- Output voltage: 6/12VDC
- Max output current: 1A/4A
- Capacity: 7-80Ah
- IP65 rated
- 200(L) x 70(W) x 50(D)mm

$169

12V-7.2A/24V-3.6A 9 STATE CHARGER MB-3613
Fully automatic 9 state charger for 12 or 24V sealed lead acid (SLA) batteries- wet cell, gel cell and AGM.
- Output voltage: 12/24VDC
- Max output current: 7.2A/3.6A
- Capacity: 14-160Ah
- IP65 rated
- 210(L) x 90(W) x 60(D)mm

NOW $299
SAVE $50

12V-15A/24V-7.5A 9-STATE CHARGER
MB-3607 **WAS $349**
Fully automatic 15A high current charger with maintenance charging of all types of SLA batteries as well as lead-calcium batteries from 50 - 250Ah, and either 12V or 24V.
- Output voltage: 12/24VDC
- Max output current: 15A/7.5A
- Capacity: 50-250Ah
- IP65 rated
- 260(L) x 135(W) x 70(H)mm

ON-BOARD MARINE BATTERY CHARGERS
Advanced electronic and fully automatic. Charge multiple batteries such as cranking and house batteries simultaneously once connected to shore power.
- 5 multi-stage charging
- Initialize, fast charging, optimizing, maintaining, smart storage modes
- Suits flooded, standard AGM & GEL batteries
- IP68 waterproof rated
- LED system & status indicators

12A 12/24V DUAL MB-3616 **WAS $299**
20A 12/24/36V TRIPLE MB-3617 **WAS $399**

MB-3616

NOW $249
SAVE $50

MB-3617

NOW $349
SAVE $50

$79.95

12VDC LEAD ACID BATTERY TESTER
QP-Z261
Tests most automotive cranking lead acid batteries, including an ordinary lead acid battery, AGM flat plate, AGM spiral, and GEL batteries.
- 6-30VDC voltage range
- 125(L) x 70(W) x 25(H)mm

Battery not included

FROM $34.95

BATTERY BOXES
Protect your batteries with these sturdy boxes. Perfect for mounting in your boat, trailer or caravan.
FITS 40AH SLA BATTERY HB-8100 **$34.95**
FITS 100AH SLA BATTERY HB-8102 **$39.95**

SB-1698

FROM $129

12VDC SLA DEEP CYCLE GEL BATTERIES
Leakproof and completely sealed, ideal for solar power, 4WD, camping etc.
26AH SB-1698 **$129**
40AH SB-1699 **$199**
100AH SB-1695 **$379**

SB-1680

FROM $279

12VD DEEP CYCLE AGM BATTERIES
Designed to store large amounts of energy, they give superior deep cycling performance for many different recreational and industrial applications such as camping, boats, motorhomes etc.
75AH SB-1680 **$279**
100AH SB-1682 **$329**

See terms & conditions on page 8.

Workbench Essentials:

There has been an obvious resurgence in people getting back to the workbench and reviving skills involving manual dexterity. As you will see across the following pages, Jaycar has all the DIY tools you'll need to equip your workbench so you can create projects from the power of your brain and your hands.

NOW $249
SAVE $50

$179

NOW $59.95
SAVE $10

$39.95

NOW $69.95
SAVE $20

$59.95

1. ANTI STATIC MAT TH-1776
- Ideal for field service people
- Mat folds out to work area of 600 x 600mm (approx)
- 2 pouches at one end
- Ground lead and and wrist strap included

2. 8 PIECE SCREWDRIVER AND TOOL SET TD-2031
- Quality rubber-moulded insulation for in-hand comfort
- VDE approved to 1000V
- Insulated right to the tip

3. 65W ESD CONTROLLED SOLDERING STATION WITH DIGITAL DISPLAY TS-1440 **WAS $299**
- Excellent temperature stability and anti-static characteristics
- 230-240VAC supply voltage
- 200 - 480°C temperature range
- 65W capacity heater
- 0.5mm tip supplied
- 146(L) x 115(W) x 98(H)mm

4. SOLDER FUME EXTRACTOR TS-1580 **WAS $69.95**
- Removes dangerous solder fumes
- Ball bearing high volume fan
- ESD safe
- Spare filters, pack of 5 - sold separately (TS-1581 **$9.95**)
- 260(H) x 200(W) x170(D)mm

5. 0 TO 30VDC 5A REGULATED LAB POWER SUPPLY MP-3840
- Digital control, large LED display
- Built-in over-current & short circuit protection
- Output current: 0-5A
- 270(L) x 120(W) x 185(H)mm

6. MINI TRUE RMS AUTORANGING DMM QM-1570 **WAS $89.95**
- Compact, IP65 rated
- Drop tested from 2m height
- Cat III 600V Safety Rating
- AC/DC voltages up to 600V
- AC/DC current up to 10A
- Temperature -20°C to 750°C
- Includes test leads and carry case

CAT III Clamp Meters

Our range of CAT III Clamp Meters makes the best general troubleshooting tool for commercial and residential electricians and includes features found on more expensive units such as autoranging, date hold, non-contact voltage, relative measurement and auto power-off. Multi function with Resistance, Capacitance, Frequency and Temperature, all Clamp Meters are supplied with quality temperature probe and carry case.

WAS $69.95
$59.95
SAVE $10

400A AC QM-1561
- Cat III 600V, 4000 count
- AC/DC voltage < 600V
- AC current < 400A
- Jaw opening 30mm

WAS $129
$99
SAVE $30

400A AC/DC QM-1563
- Cat III 600V, 4000 count
- AC/DC voltage < 600V
- AC/DC current < 400A
- Jaw opening 30mm

WAS $159
$149
SAVE $10

1000A TRUE RMS AC/DC QM-1566
- Cat III 600V, 4000 count
- AC/DC voltage < 600V
- AC/DC current < 1000A
- True RMS, min-max, bargraph and more
- Jaw opening 40mm

NEW LOW PRICE!
ORRP $239
$199
SAVE $40

VARIABLE LABORATORY AUTOTRANSFOMER (VARIAC) MP-3080

Encased in heavy-duty steel housing, this unit enables the AC input to a mains powered appliance to be easily varied between 0 to full line voltage (or greater).
- 500 VA (fused) rated power handling
- 0-260 VAC @ 50Hz output voltage

MP-3242

FROM $59.95

60W DESKTOP STYLE AC ADAPTOR

Versatile switchmode power supplies in a range of different configurations.

12VDC 5A	MP-3242	**$59.95**
19VDC 3.4A	MP-3246	**$59.95**
24VDC 2.7A	MP-3248	**$59.95**
12VDC 5A (5 PLUGS)	MP-3243	**$64.95**

$22.95

QUICK CONNECT PACK PT-4530

Consists of all the standard 1/4" (6.35mm) QC tabs and receptacles and also odd QC sizes ie: 3.3mm and 4.8mm sizes. 160 pieces.

$8.95

5 WAY CRIMPING TOOL TH-1828

Cuts and strips wire. Can also cut bolts with diameter M2.6, M3.0, M3.5, M4.0 & M5.0.

$34.95

42 PIECE ASSORTED SOLDER SPLICE HEATSHRINK PACK WH-5668

Quickly create sealed soldered joint in one go. Each splice has just the right amount of solder to create a secure and well-insulated connection. Includes assorted colours and sizes to suit various cable size.

See website for full contents.

EXCLUSIVE CLUB OFFERS:

FOR NERD PERKS CLUB MEMBERS

15% OFF 15% OFF 15% OFF

3D PRINTER FILAMENT*

WE HAVE SPECIAL OFFERS EVERY MONTH. LOOK OUT FOR THESE TICKETS IN-STORE!
NOT A MEMBER? Visit www.jaycar.com.au/nerdperks

NERD PERKS CLUB OFFER

JUST $6

PORTABLE POWER SUPPLY BUNDLE
9V ALKALINE BATTERY SB-2423 **$3.95**
2.1MM DC PLUG WITH SCREW TERMINALS PA-3711 **$4.95**
9V BATTERY SNAP PH-9232 **95c**

VALUED AT $9.85

SAVE 35%

NERD PERKS CLUB OFFER

2 FOR $49.90

MAINS WI-FI CONTROLLER MODULE WITH APP
MS-6126 **REG $29.95**

SAVE 15%

NERD PERKS CLUB OFFER

10% OFF

PURE SINE WAVE INVERTERS 600W - 1500W

12V 600W 20A MI-5720
12V 1000W 30A MI-5722
12V 1500W 30A MI-5724

NERD PERKS **SAVE 20%**

SOLDERING IRON TIP CLEANER
TS-1512 **REG $12.95 CLUB $9.95**
Cleans and rejuvenates soldering iron tips. 15g.

NERD PERKS **SAVE 20%**

ABS IP66 ENCLOSURE
HB-6404 **REG $34.95 CLUB $27.95**
Large 200(L) x 200(W) x 130(D)mm.

NERD PERKS **SAVE 35%**

THERMAL TRANSFER TAPE
NM-2790 **REG $12.95 CLUB $7.95**
100x100x0.5mm. Pack of 2.

NERD PERKS **SAVE 20%**

12V 45W DIN RAIL POWER SUPPLY
MP-3190 **REG $49.95 CLUB $39.95**
Single output. Built-in EMI filter.

NERD PERKS **SAVE 15%**

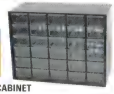

30 DRAWER CABINET
HB-6323 **REG $29.95 CLUB $24.95**
280(W) x 210(H) x 130(D)mm.

NERD PERKS **SAVE 20%**

NON-CONTACT IR THERMOMETER
QM-7218 **REG $34.95 CLUB $27.95**
Ultra compact. IP67 rated.

NERD PERKS **HALF PRICE!**

ANTI STATIC WRIST STRAP
TH-1761 **REG $17.95 CLUB $8.95**
Expanded lead length approx. 1.8 m

NERD PERKS **SAVE 25%**

USB 3.0 SDXC/MICRO SD CARD READER
XC-4782 **REG $16.95 CLUB 11.95**
Supports up to 32GB SDHC and 2TB SDXC.

NERD PERKS **SAVE 15%**

DIGITAL AUDIO CONVERTER & REPEATER
AC-1592 **REG $54.95 CLUB $44.95**
Signal output to TOSLINK and Coaxial ports simultaneously.

NERD PERKS **HALF PRICE!**

GREENCAP CAPACITOR PACK - 60 PIECES
RG-5198 **REG $11.95 CLUB $5.95**
From 0.001uF to 0.22uF. 100V.

NERD PERKS **SAVE 25%**

250G DUST REMOVER SPRAY CAN NA-1018
REG $19.95 CLUB $14.95
Non-CFC, non-flammable gas.

NERD PERKS **SAVE 25%**

BLADE FUSE HOLDER
SZ-2013 **REG $34.95 CLUB $24.95**
32VDC. 30A.

NERD PERKS CLUB MEMBERS RECEIVE:

15% OFF

3D PRINTER FILAMENT*

*Excludes 3D printer parts & accessories

YOUR CLUB, YOUR PERKS:
REMEMBER TO GET YOUR CARD SCANNED AT THE COUNTER TO GET POINTS*.
$1 = 1 POINT.
500 POINTS = $25 JAYCOINS GIFT CARD
*Conditions apply. See website for T&Cs.

NEW 2018

What's New:

We've hand picked just some of our latest new products. Enjoy!

$59.95

CAR BOOM BOX
WITH AMPLIFER QM-3410

6" woofer and powerful tweeter, for great overall sound. Play your favourite music from multiple sources using various inputs: RCA, USB, microSD card slot or stream live via Bluetooth.

- USB & microSD card input
- 1200W PMPO output
- FM Radio
- Power: 12VDC, 2A /240VAC
- 400(W) x 220(H) x 195(D)mm

$19.95

Due early May.

12V BATTERY LOW VOLTAGE PROTECTOR MB-3677

Automatically shuts off power to the connected device if voltage drops below 11.6V.

- Power status indicator
- No installation required

Due early May.

$39.95

NBN/UFB REPLACEMENT POWER SUPPLY 12V 2.5A MP-3538

Plug-in replacement power supply for direct connection into your NBN or UFB connection box. No wiring required. Suitable for use with FTTP optical fibre boxes as used in Australian NBN and New Zealand UFB networks. Compliant with Australian and New Zealand Safety Standards.

- Input: 100 - 240VAC 50/60Hz
- Output: 12VDC 2.5A

$169

TPLINK AC1200 VDSL/ADSL MODEM ROUTER YN-8440

Unlock the full potential of your internet connection. Combined dual band Wi-Fi speeds of up to 1.2Gbps, eliminating lag and buffering from your online experience.

$69.95

2 CHANNEL MICROPHONE MIXER WITH PREAMPLIFIER AM-4201

Takes your standard microphone level and boosts it for compatibility with line-level 6.5mm inputs. Stereo RCA output.

- Volume control
- Mains powered

$69.95

LED PROJECTION LIGHT SL-3403

Light up your home or garden. Mains powered, IP65 weatherproof housing. Includes a garden stake, stand, and wall-mounting kit.

- 125(D) x 155(H) x 100(W)mm

$19.95

RGB 8X8 LED MATRIX ZO-1810

Full RGB 8x8 Matrix controlled through 32 pins. Flush edges for creating extended displays.

- 192 LEDs in 64 pixels

$9.95

8 DIGIT 7 SEGMENT DISPLAY MODULE XC-3714

Build a project with heaps of 7-segment displays without using up a lot of IO pins!

- SPI interface
- 15mm panel height with red 9mm digits
- MAX7219 features dimming and digit decoding

$9.95

IR REMOTE CONTROL FOR ARDUINO® XC-3718

Add IR remote control to your next Arduino® project. Compact design with 21 buttons including numbers and channel controls.

$12.95

LED TRAFFIC LIGHT MODULE FOR ARDUINO® XC-3720

Set up a basic status display for your next project. Universal colour codes: RED, YELLOW, GREEN. Stop, Caution, Go.

- 10mm red, yellow, green LEDs

$9.95

LED PUSHBUTTON MODULE FOR ARDUINO® XC-3722

A simple pushbutton module with a green LED, ideal for adding an input to a breadboard design or other project.

- 5V and 3.3V compatible

TERMS AND CONDITIONS: REWARDS / NERD PERKS CARD HOLDERS FREE GIFT, ¾ SAVING DEALS, DOUBLE POINTS & MEMBERS OFFERS requires ACTIVE Jaycar Rewards / Nerd Perks Card membership at time of purchase. Refer to website for Rewards/Nerd Perks Card T&Cs. PAGE 3: Nerd Perks Card holders receive special price of $34.95 for Power Usage Monitor Project (1 x XC-3882 + 1 x XC-4610 + 1 x XC-3850 + 1 x WH-3025 + 1 x HM-3230) when purchased as bundle. PAGE 7: Nerd Perks Card holders receive special price of $8.00 for Portable Power Supply Deal (1 x SB-2423 + 1 x PA-3711 + 1 x PH-9230) when purchased as bundle. Nerd Perks Card Holders gets 10% OFF Regular Price for Pure Sinewave Inverters with Solar Regulators 600W-1500W applies to MI-5720, MI-5722 & MI-5724. 15% OFF 3D Printer Filament (excludes 3D printer parts & accessories).

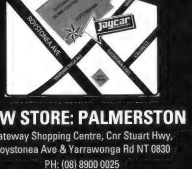

NEW STORE: PALMERSTON

Gateway Shopping Centre, Cnr Stuart Hwy, Roystonea Ave & Yarrawonga Rd NT 0830
PH: (08) 8900 0025

FOR YOUR NEAREST STORE & OPENING HOURS:

1800 022 888
www.jaycar.com.au

97 STORES & OVER 140 STOCKISTS NATIONWIDE

Jaycar

Head Office
320 Victoria Road,
Rydalmere NSW 2116
Ph: (02) 8832 3100
Fax: (02) 8832 3169

Online Orders
www.jaycar.com.au
techstore@jaycar.com.au

Arrival dates of new products in this flyer were confirmed at the time of print but delays sometimes occur. Please ring your local store to check stock details. Occasionally there are discontinued items advertised on a special / lower price in this promotional flyer that has limited to nil stock in certain stores, including Jaycar Authorised Stockist. These stores may not have stock of these items and can not order or transfer stock. Savings off Original RRP. Prices and special offers are valid from Catalogue Sale 24 April – 31 May, 2018.

Don't let one small "oops" fry your computer – and cost you $$$$!

USB PORT PROTECTOR

by Nicholas Vinen

Using your PC or laptop to power a 5V project that you're working on is very convenient – but it's *so* easy to make a small slip while plugging something into a breadboard and oops! That's exactly what happened to one of our staff members. For a while after the incident, it looked like his (own!) laptop was toast. But fortunately he was able to safely reset it and it came back to life. But he was SO lucky! Next time he'll definitely be using this simple, economic device . . .

We won't name the hapless person who thought he'd cooked his laptop. To avoid embarrassment, we'll simply refer to him as A.P. (ie, Accident Prone).

This is one of those projects we know will be useful because A.P. kept asking "is it finished yet" as he obviously needed it!

That incident obviously spooked him and why wouldn't it? He could have lost a lot of work and spent quite a bit of money and time on buying a new computer and then setting it up, which could have taken several days.

We do a lot of development work, increasingly with Arduinos and similar microcontroller modules. We also do quite a bit of bread-boarding, often in combination with the Arduinos.

When you're doing this kind of work and you have external power supplies or voltage sources connected to your circuit, that's just asking for trouble.

You may not realise it but when an Arduino board (or similar) is plugged into your computer's USB port, you're just one slip away from potential disaster.

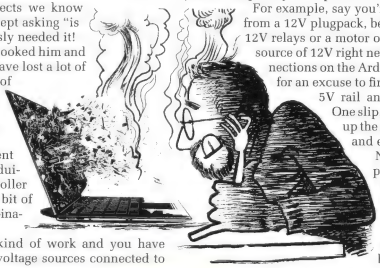

For example, say you're running the Arduino from a 12V plugpack, because it's driving some 12V relays or a motor or whatever. So there's a source of 12V right near a bunch of other connections on the Arduino board, just looking for an excuse to find its way onto the USB 5V rail and into your computer. One slip, and oops! It could blow up the Arduino, your shield(s), and even your computer.

Not only will this USB port protector vastly improve the chances of your computer surviving such an event, it may also prevent damage to the Arduino board and whatever

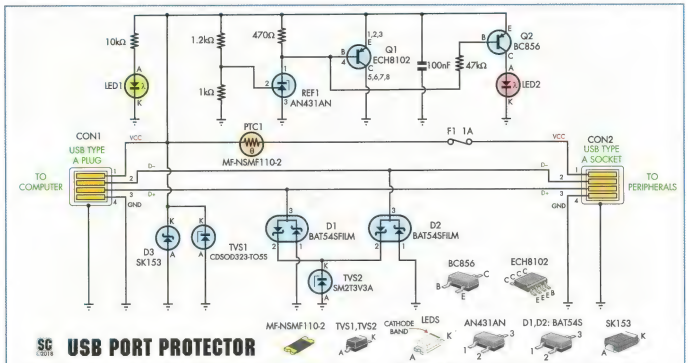

Fig.1: the circuit diagram of the USB Port Protector. Diode D3, zener TVS1 and transistor Q1 are all connected between V_{CC} and GND and shunt current when an excessive voltage is applied, while polyswitch PTC1 and fuse F1 prevent large currents from flowing if the fault is serious. Diodes D1 & D2 and zener TVS2 protect the D+ and D- data lines.

shields or other circuitry are plugged into the USB port. We can't promise it will be 100% safe but it's certainly a lot safer than if you aren't using any protection...

You might expect USB ports to have some kind of built-in protection against external voltages being fed in. After all, all kinds of devices can be plugged into these ports, including external hard disks and amplifiers and other gear which has its own, separate power supply.

In fact, many USB ports do have some protection, such as series PTC thermistors ("polyswitches") to limit fault currents, transient voltage suppressors and so on. But this protection varies between computers and is often absent in laptops and notebook computers.

Let's face it, there's a lot less space inside portable computers – and manufacturers also want to keep the computer as light as possible and save money where they can. That means leaving out anything that isn't absolutely necessary.

Regardless of what sort of protection your USB port may have, this USB Port Protector is small and cheap, so why not add in an extra layer of defence? If you ever manage to activate its protection, it will have paid for its cost many times over!

Circuit description

The circuit of the USB Port Protector is shown in Fig.1. USB plug CON1, which plugs into your computer, is shown on the left side while the USB socket, CON2, goes to the connected device (Arduino, etc) is on the right. Just to be clear – the potential danger of overload from excessive voltages or currents comes via CON2.

The ground connection and the two differential data lines, D+ and D-, are wired straight through between plug and socket (ie, CON1 and CON2) while the 5V power flows through fuse F1 and positive temperature coefficient thermistor PTC1.

We've used both a fuse and PTC because the fuse reacts faster to very high currents, protecting the rest of the circuitry on the board if there's a serious fault, but the PTC does not need to be replaced if it "trips" and helps the circuit to handle moderate overloads without damage.

PTC1 normally has a low resistance – around 100mΩ below 1A – but if the current through it increases, its resistance rises, limiting it at around 2A (given enough time for it to heat up). This would normally only occur if the 5V line rises above 5.5V and the Port Protector is shunting current in order to prevent it rising further.

In fact, the Port Protector does very little as long as the USB supply voltage is in the normal range of 0-5.25V and the D- and D+ lines are in the normal range of 0-3.3V. Green LED1 lights up to indicate power is present but that's about it. The unit draws around 3mA in this condition.

If the 5V rail is pulled negative, ie, below 0V (eg, you've accidentally shorted it to the output of a transformer or some other supply rail) then schottky diode D3 will conduct. This prevents V_{CC} from going below about -0.5V.

D3 is a high-current diode, capable of handling 15A continuously and 275A for around 5ms, so it makes a very effective clamp. It limits the voltage on V_{CC} to -0.55V at 15A, so your PC is safe from damage from negative voltages on the supply line.

Should the overload condition persist, either PTC1 will limit the overload current to a safe level or F1 will blow, disconnecting the compromised circuitry from your computer.

Clamping positive voltages

It's even more likely that you might accidentally short the 5V rail to a higher voltage, eg, 12V from a car battery. Just think of the heavy currents which will fry anything

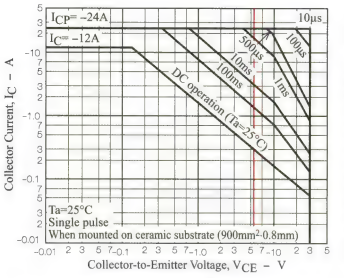

Fig.2: safe operating area (curves) for the ECH8102 PNP transistor, used in this device as a protective shunt. The vertical red line corresponds to a shunt voltage of 5.5V and its intersection with the SOA curves shows how long the transistor is guaranteed to survive at various collector current levels.

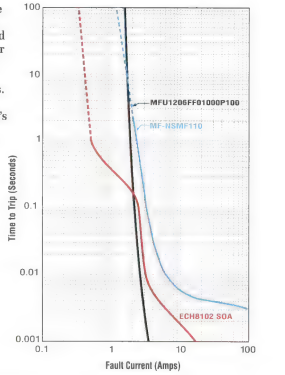

Fig.3: the fuse blow time for F1 (black) and "trip" time for PTC1 (blue) at various current levels. The relevant portion of Q1's SOA curve from Fig.2 is plotted in red and you can see that F1 will protect Q1 for fault currents above 2A.

connected to it! The Port Protector has active and passive systems to handle this situation.

The active system is the first line of defence. It comprises high-current PNP transistor Q1 and shunt voltage reference REF1. The 1.2kΩ/1kΩ resistive divider across the 5V supply feeds 45.45% of the supply voltage to the adjust terminal of REF1. It's designed to sink current into its cathode terminal as soon as this adjust terminal exceeds +2.5V.

So given the voltage divider, that means that it will sink current when the supply exceeds 5.5V (2.5V ÷ 45.45%). This will cause a voltage to develop across the 470Ω resistor and once that voltage exceeds around 0.7V (Q1's base-emitter voltage), Q1 will switch on and shunt the 5V supply rail, pulling it down.

In this manner, REF1 and Q1 act to limit the 5V supply rail to just over 5.5V. Q1 is capable of handling more than 10A but since there will be 5.5V between its collector and emitter, it can only do that for a very short time before it overheats. But at the same time PTC1 will rapidly heat up and increase its resistance, to limit that current. And in any case, if the current exceeds 3A, for example, the fuse will very quickly blow before Q1 is damaged.

So REF1/Q1 act together as a very precise and very fast clamp. When REF1 is sinking current from Q1's base, Q2 will also normally switch on as its base is also pulled around 0.7V below its emitter, via the 10kΩ resistor. This will light up red LED2, indicating that the clamp is operating and that you have a problem. LED2's current is limited by its low base current and relatively fixed gain (h_{FE}).

REF1 can sink up to at least 100mA and Q1 has a current gain (h_{FE}) in the hundreds, so Q1 is more than capable of passing its full peak current rating of 24A in this circuit.

Note that LED2 may go out if there is a persistent overload, since when Q1 heats up, its base-emitter voltage will drop and it may drop low enough below Q2's base-emitter switch-on voltage that it will no longer switch on. But chances are that PTC1 and/or F1 will have acted to limit the fault current by that stage anyway.

The only problem with the clamp provided by Q1 and REF1 is the reaction time. It takes a short time for REF1 to react to an increase in the feedback voltage and it also takes time for Q1 to switch on – around a microsecond.

Passive clamping

This is why we also have a transient voltage suppressor, TVS1 connected across the 5V supply rail. It's a passive device which will react more-or-less instantly to excessive voltage.

But like most zener-type devices, the difference between the voltage at which it will start to conduct current and the voltage across it when a large current is flowing is quite large. We've selected the most suitable device possible but it's still not ideal.

The "working voltage" for TVS1 is defined as 5V but it's designed to pass only 1mA or so at 6.0V. The clamping voltages are specified as 9.8V at 1A and 13.5V at 42A.

So clearly, we can't rely on this device to protect the PC since it would allow quite a high voltage to be fed back in before taking effect. Hence our dual-action strategy, with TVS1 there to limit very brief, high-voltage excursions (eg, a static discharge) and also to "fill in the gaps" for the short period until Q1/REF1 are able to switch on and shunt the fault current.

Protection for the signal lines

We've also included 3V transient voltage suppressor TVS2 and dual schottky diodes D1 and D2 to protect against damaging voltages being fed in via the D+ and D- signal wires. This is unlikely, since these lines normally go straight to some sort of USB/serial adaptor or micro on a development board and so there aren't many exposed components to accidentally short.

But it's still possible that a high voltage fed into your +5V rail (or +3.3V rail, or some other supply point) could

damage the USB/serial adaptor or microcontroller and allow current to flow through into the D+ and/or D- lines. So we decided that we should provide at least some protection for these lines, as well.

The half of dual diodes D1/D2 that connects between ground and the signal line prevents them from being pulled too far below ground.

We're using smaller diodes here since a large diode would have too much capacitance and would interfere with USB signalling. But these diodes are still rated at 300mA continuous and 1.25A for 10ms, with a forward voltage below 1V up to several hundred milliamps. So they should provide decent protection.

TVS2 has a breakdown voltage of around 3.6V at 1mA and a clamping voltage of 6.5V at 25A. So the combination of D1/D2 and TVS2 should conduct significant current away from the D+/D- lines well before their voltages reach 5V. Most USB ports would not be damaged by these voltages.

We can't put a voltage suppressor like TVS2 directly between the D+ and D- lines and ground because it would have far too much capacitance. But the series diodes between D+/D- and TVS2 have a much lower capacitance that's effectively in series with that of TVS2, so they have virtually no effect on signalling. We tested our prototype with a "hi-speed" USB card reader and it functioned normally.

Is it bulletproof?

In a word, no, but if it does fail, the Port Protector is likely to fail in such a way that it still protects your computer. While our testing shows that it's robust and can handle significant overloads without damage, if you apply just the right (worst possible) combination of voltage and current, it may be possible to blow Q1 or TVS1 before F1 blows.

Still, our testing suggests that the most likely outcome of a serious overload is for F1 to blow and at least it's cheap and (relatively) easy to replace.

The difficulty in designing a circuit like this to be able to withstand anything you can throw at it is that in order to effectively protect against a high current source being connected to the V_{CC} line, it needs to absorb quite a lot of power in a brief period. And while the PTC and/or fuse should ideally cut the power to protect the other components, they may not be fast enough.

Fig.2 shows the "safe operating area" (SOA) curves for transistor Q1, taken from the ECH8102 data sheet. We've added a vertical red line to show the typical voltage of about 5.5V across Q1 while it is conducting.

While this is a high-current transistor, it is quite tiny so if a high current is applied, it will quickly overheat and might fail. As shown in Fig.2, it's guaranteed to survive 24A at 5.5V (132W!) for somewhere between 500µs and 1ms. For longer periods, the maximum allowable current is lower; around 3A (16.5W) for 10ms, 1.5A (8.25W) for 100ms and 300mA (1.65W) continuously.

Beyond this, it may survive but that isn't guaranteed. Our testing has shown that for a single pulse, these ratings are very conservative. But it's good practice to design a circuit to stay within these ratings.

The "trip" times for PTC1 (blue) and F1 (black) are shown in Fig.3. We've also plotted the relevant portion of the SOA curve for Q1 in red so that you can compare them. As you can see, F1 responds considerably faster than PTC1 and in fact is very likely to blow before Q1's SOA is exceeded for currents above 2A.

For fault currents between 300mA and 2A, it's possible that Q1 will overheat and fail before either F1 blows or PTC1 acts to limit the current. And in fact, PTC1 is not guaranteed to do anything for fault currents below 1A. You will need to notice red LED2 lighting and resolve the fault yourself.

Still, as we said above, the ratings for Q1 seem to be pretty conservative and as long as the overload is limited to no more than a second or two, we would expect it to survive.

Looking at Fig.2, you may wonder why we've bothered with the PTC at all, given that its "trip" current is higher than the fuse blow current over most of the graph. But keep in mind that PTC1 is considered to be "tripped" when it has reached a high enough resistance value to keep the fault current below 2.2A.

It will still have some effect in reducing the fault current even at lower current levels and shorter time spans, because its resistance will start to increase well before it has fully tripped.

And you also have the option of replacing F1 with a zero-ohm resistor (or just soldering across the pads) and relying on PTC1 to limit fault currents. This does increase the risk of blowing Q1 in a serious fault (although, as we said, it's pretty robust) but doing so would also increase the chance that the unit will survive a moderate overload unscathed and you won't have a blown fuse to replace.

Note that while replacing Q1 is a bit of a pain, it's actually quite cheap (under $1) so if Q1 does "throw itself on the grenade" and fail while protecting your computer from damage, at least it isn't an expensive failure.

Parts list – USB Port Protector

1 double-sided PCB, coded 07105181, 32.5 x 19mm
1 PCB-mount USB Type A horizontal plug (CON1)
1 PCB-mount USB Type A horizontal socket (CON2) [eg, Altronics P1300]
1 SMD fuse, 3216/1206 package, 1A super fast blow [Vishay MFU1206FF01000P100]
1 SMD 1.1A PTC thermistor, 3216/1206 package [Bourns MF-NSMF110-2]
1 30mm length of 20mm diameter clear heatshrink tubing

Semiconductors
1 AN431AN shunt reference IC, SOT-23 (REF1)
1 ECH8102 12A PNP transistor, ECH8 (Q1)
1 BC856 100mA PNP transistor, SOT-23 (Q2)
1 high-brightness green LED, 3216/1206 package (LED1)
1 high-brightness red LED, 3216/1206 package (LED2)
1 CDSOD323-T05S transient voltage suppressor, SOD-323 (TVS1)
1 SM2T3V3A transient voltage suppressor, DO-216AA (TVS2)
2 BAT54SFILM dual 300mA schottky diodes, SOT-23 (D1,D2)
1 15A 30V schottky diode, DO-214AB (D3; MCC SK153)

Capacitors
1 100nF SMD X7R ceramic, 3216/1206 package

Resistors (all SMD 3216/1206 package, 1%)
1 47kΩ (coded 4702 or 473)
1 10kΩ (coded 1002 or 103)
1 1.2kΩ (coded 122)
1 1kΩ (coded 102)
1 470Ω (coded 471)

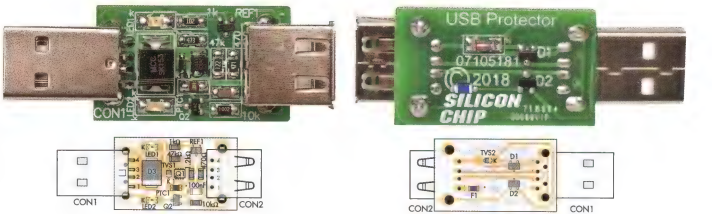

Figs.4&5: top and bottom overlay diagrams for the USB Port Protector. Use these as a guide during construction. Be careful with the polarity for TVS1, TVS2, Q1 and LEDs1&2. It's easiest to start by fitting Q1 and TVS1, then the remainder of top-side SMD components, then the bottom-side components and finally, CON1 and CON2. The matching photographs above are reproduced close to twice actual size, for clarity.

Sourcing the parts

Most of the parts are surface-mount devices (SMDs) and they are all available from Digi-Key or Mouser in the USA. Most are also available from element14 in Australia.

While both Digi-Key and Mouser offer free express international delivery for orders over $AU60, the parts for this project will cost you *much* less than that.

So we are also making the parts available a kit, to make it easier to build the USB Port Protector. The complete kit, including PCB and the USB input and output sockets will sell for $15.00 (Cat SC-4574).

Construction

The USB Port Protector is built on a double-sided PCB that measures 32.5 x 19mm and is coded 07105181. All but four of the components are mounted on the top side of the board, as shown in the overlay diagrams, Figs.4 & 5 and matching photos. The only through-hole components are the USB plug and socket.

By the way, you may notice a minor difference between the overlay diagrams and the PCB photos: we've changed TVS2 to a more suitable part since building the prototype.

Most of the parts are fairly easy to solder, although some of them are quite close together, to keep the unit compact. It's easiest to do in the following order.

Start with transistor Q1. This is in a fairly small ECH8 package, with four short leads on each side. The good news is that most of the adjacent leads are connected together so it doesn't matter if you bridge the pins when soldering (in fact, it's pretty much unavoidable). Pin 4 is the base connection and you need to make sure it doesn't short to pin 3, the emitter.

Start by identifying pin 1. There is a dot printed in the corner on the top of the package but you will need a magnifier and good light to see it. Orientate the part so that it matches the pin 1 markings on the PCB and smear a thin layer of flux paste on all eight of its pads.

Apply a tiny amount of solder to the pad for pin 4, then heat this solder while sliding the part into place. Check that the other seven pins are correctly located above their pads using a magnifier. If not, re-heat the solder joint and carefully nudge the part. Repeat as necessary until it's lined up, then solder the four pins on the opposite side of the package. These are all joined together so you can do it as one big solder joint.

Now apply solder to the three remaining pins and add a bit of fresh solder to pin 4 as well. To tidy up the solder joints, apply a little more flux paste on top of the solder and then use some solder wick to remove the excess. Clean up the flux residue with some methylated spirits, isopropyl alcohol or other flux cleaner and then inspect it visually to ensure all the solder joints are good.

That's the trickiest part out of the way. Next, solder TVS1 in place, next to Q1. It's fairly small and its cathode stripe will not be terribly obvious so again, use magnification to identify the cathode and orientate it correctly before tacking it place and soldering the opposite pin.

Now solder the SMD passive components in place; this includes five resistors, one capacitor and the PTC thermistor. None are polarised; just be careful to fit each in the location shown in Fig.4. The resistors will be printed with a small code indicating their value (eg, 1.2kΩ code is 122; or $12\Omega \times 10^2$) but the capacitor will not be marked.

The resistor codes are also shown in the parts list opposite.

The next components to mount are reference REF1 and transistor Q2. These are in identical SOT-23 packages so don't get them mixed up after taking them out of their packaging. They are polarised but have three pins each so the orientation is obvious – see the pinouts in Fig.1.

Next are the two LEDs. Usually, the cathode is marked with a green dot but sometimes the anode is marked instead. The easiest way to check is with a DMM set on diode test mode. The LED will light up with the red probe connected to the anode and black to the cathode. You can confirm the colour at the same time. Note that some DMMs (eg, those powered by two AA cells) may not apply sufficient voltage to light up a green LED.

Solder these where shown on the overlay diagram; LED1 is green while LED2 is red and the cathodes are orientated towards the USB plug, as shown by the "K" markings on the PCB.

Now solder schottky diode D3 in place. Add a little flux paste to the pads first as it's quite large but the procedure

is much the same as for the other two-pin devices. Just make sure you apply the iron for long enough to form good solder fillets between the PCB and terminals of the device.

Then flip the board over and fit the four remaining SMDs on the bottom side, as shown in Fig.5. D1, D2 and ZD1 are polarised; also pay particular attention to the location of the cathode stripe on ZD1. The fuse is not polarised.

Finally, fit the USB plug and socket as shown. Both need to be pushed down firmly onto the PCB before soldering. The plug has a notch on the underside which the edge of the PCB fits into. Note that the USB plug pins may be quite short and may not protrude very far through the bottom of the PCB, so it's a good idea to solder them on both sides. Just make sure you don't accidentally bridge the pins.

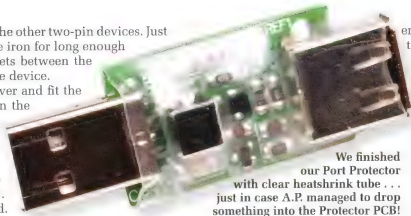

We finished our Port Protector with clear heatshrink tube . . . just in case A.P. managed to drop something into the Protector PCB!

Testing

Inspect the board to verify that all the solder joints are good and that you have no unwanted bridges, then plug it into a USB port on your PC. If you have a USB charger, you could use that instead. Check that the green LED lights up but the red LED should not.

You can then carefully measure the voltage across D3. You should get a reading in the range of 4.5-5.25V (usually quite close to 5V), with the red probe to its cathode (striped) end.

Now plug a small device like a USB card reader or flash drive into the socket and verify that it powers up correctly. Try reading the contents of the card/flash drive on your PC and verify that it works normally without any unexpected disconnection events.

If you want to verify that the Port Protector will definitely protect your computer, you will need a ~6V supply and a resistor with a value between 2.2Ω and 10Ω.

Unplug the Port Protector and anything that's plugged into it and use a clip lead to connect the USB socket shell to the ground terminal of your 6V supply. Connect one end of the test resistor to the positive output of the 6V supply (battery pack, plugpack, etc) and then touch the other end of the resistor to the USB socket pin that's immediately adjacent to fuse F1, on the underside of the board.

If you can do this while looking at the top of the board, you should see both LED1 and LED2 light up. LED2 indicates that the protection is operating. If you have a helper, they could measure the voltage across D3. It should be close to 5.5V. This confirms that the device is working.

Using it

To avoid accidentally shorting the 5V supply or either of the signal lines during use, we suggest you encapsulate the entire device in a short piece of heatshrink tubing, as shown above. Clear tubing is convenient since you can still see the components – but any colour will work.

Cut the tubing so that it covers the entire USB socket, up to the lip that's around the open end, and the very base of the USB plug, up to where it projects from the PCB. Then it's just a matter of applying a little heat, eg, from a hot air gun, hair drier or lighter (with the flame some distance below the tubing).

Rotate the assembly until the tubing has shrunk into place and try to avoid burning yourself in the process. If it gets too hot to hold, put it down and let it cool before shrinking the remainder of the tubing.

If you manage to blow the fuse, you will simply have to cut the tubing off, desolder the fuse, clean the old solder off using flux paste and some solder wick, solder a new fuse in place and apply a fresh length of heatshrink tubing.

Or if you're really clever, you may be able to cut a flap in the tubing around the fuse, replace it and then glue the flap back in place. SC

SILICON CHIP ONLINESHOP

. . . it's the shop that never closes! 24 hours a day, 7 days a week

. . . it's the shop that has all recent SILICON CHIP PCBs – in stock

. . . it's the shop that has those hard-to-get bits for SILICON CHIP projects

. . . it's the shop that has all titles in the SILICON CHIP library available!

. . . it's the shop where you can place an order for a subscription (printed or on-line) from anywhere in the world!

. . . it's the shop where you can pay on line, by email, by mail or by phone

INTERNET (24/7) Credit/Debit Card etc siliconchip.com.au

PAYPAL (24/7) Use your PayPal account silicon@siliconchip.com.au

eMAIL (24/7) silicon@siliconchip.com.au with order & credit card details

MAIL (24/7) Your order to PO Box 139 Collaroy NSW 2097

PHONE • 9-5, MON-FRI Call (02) 9939 3295 with with order & credit card details

Browse online now at www.siliconchip.com.au/shop

SERVICEMAN'S LOG

The Serviceman's Curse

Dave Thompson*

I reckon servicemen are cursed. I don't mean that people swear at us a lot (though they might!), I mean that we bear the Curse of the Serviceman. This means that when anything breaks down, we always consider the repair option first. It doesn't really matter what has broken or whether we usually repair or service these things in our day jobs, it's just that we simply can't help ourselves from wanting to fix something that's broken.

Items Covered This Month

- Car battery charger
- CIG Transmig 200 welder
- Compaq CQ61 laptop R&R
- MR16 LED downlight repair

*Dave Thompson runs PC Anytime in Christchurch, NZ.
Website: www.pcanytime.co.nz
Email: dave@pcanytime.co.nz

This is mostly fine if we just have ourselves and our own household to think about, but for some, it also means that when any of our friends, acquaintances or colleagues break something, we are often expected to fix their stuff as well, just because we are servicemen! As if being our own go-to repair guy isn't enough. This is what I mean by a Serviceman's Curse.

While the more prosperous servicemen among us may have learned to suppress the curse and are able to chuck away the broken device and go out and buy a replacement instead, for me and many others, that is a difficult decision to make and we would have to force ourselves to even consider it.

When something in my household breaks, my first instinct is to weigh up all possible options to repair it myself, with the very last option being to buy another one. Perhaps if I won big on the lottery, or inherited a few gazillion

bucks, this attitude might change – I'd sure like to test that theory! But in the meantime, I always consider repair before replacement.

I know plenty of people who think the other way. They replace anything that breaks with the latest and greatest new version, regardless of whether it was repairable or not, but not many of these people are servicemen. I can't really blame them; after all, they don't bear the curse!

Of course, there are exceptions; if a repair isn't feasible or economically sensible, such as a dropped dinner plate or wine glass then the curse doesn't really apply. Having said that, I have been known to glue people's favourite plates or porcelain figurines back together. But if the broken article is even remotely within my skillsphere, then the curse awakens.

My neighbour invokes the curse

A recent example involves a neighbour who tried to start his car the other day while he still had a battery charger connected. He subsequently discovered that the charger no longer worked.

I've done this myself in the past and perhaps due to dumb luck, I've had no problems, though it stands to reason that one probably shouldn't leave anything connected when cranking the engine unless it's designed to handle it.

This is especially true if the car battery is dead flat to begin with and we are essentially relying on the output of the charger alone to supply enough grunt to fire up the motor. In such situations, the current draw through the leads and internal components of the charger can be considerable, and when the car starts there is even more current introduced into the circuit by the alternator's output.

Many car battery chargers are simply not designed to withstand this kind of punishment.

Ordinarily, a guy would just think the charger was dead, chuck it in the bin and go out and buy another one – especially given the current (hah!) prices of chargers these days. In this case, the sticky wicket was that my neighbour had borrowed the charger from a friend, and while it was by no means new, it looked to him to be a reasonably flash model as far as car battery chargers go. He didn't relish the thought of having to cough up to replace it.

He brought it over to my workshop in a bit of a panic and asked if I could have a look at it, at least to see whether it was repairable. If not, he'd be chowing down on a large crow sandwich and splashing out for a new charger.

I promised to see what I could do, mindful of the fact that this would probably end up being one of those "pro bono" jobs all servicemen get saddled with and would more than likely take up time I could ill afford to spare. That said, I couldn't refuse a neighbour in need, especially as it was highly likely that I could fix the charger. The Serviceman's Curse strikes again!

The charger was about as simple as any electronic device can get. A mains cable enters the plastic case through a cheap-but-effective clamping arrangement and connects via a fuse to the primary of a reasonably heavy-duty transformer. The secondary is wired to a small PCB with a glass thermal cut-off switch, a couple of carelessly-placed diodes and three LEDs.

Attached to that board are a couple of cables which then exit the case through a rubberised grommet with comically-large alligator clips on each end; one red and one black. He might have thought it flash but I disagreed; it was a bog-standard battery charger.

The battery connector cables looked to me to be a little on the light side, considering the size of the transformer and the cables that make up your average set of jumper leads. But I suppose these modern-style, piddly-thin wires would have the advantage of being self-limiting and besides, they'd ordinarily only have to cope with a few amps at the most for relatively short periods anyway.

The LED indicators were mounted inside the case but shone to the outside world by way of clear plastic light tubes.

I've seen this method used before, especially in devices like amplifiers, radios and laptops and it tends to work fine for them. But the inside of this charger gets hot then cools down, over and over, and this, when combined with the natural ageing process, causes the plastic to go opaque.

Because of this, the amount of light reaching the user would likely be pretty low. I'd wager these indicators would be barely visible during the day, especially in bright sunlight. I'd confirm that theory once I'd fixed the thing…

Testing the charger

I plugged the charger into my lightbulb based load box and flicked the box's socket switch to on. I've gotten into the habit of using this load box, largely because it is set up on my workbench permanently and this makes it the handiest power socket for any mains-powered devices that cross my desk. It can't hurt, regardless of whether I really need it or not.

The neighbour told me he'd plugged the charger in and got no indication of power, and with no specific mention of fuses blowing or circuit-breakers popping, it was unlikely that a short-circuit was present. However, the test rig socket is right there, so I used it.

The load box consists of two 250W incandescent bulbs (remember them?) mounted in a couple of lamp sockets screwed to the top of a suitably-sized, plastic hobby box.

The lamps are wired in series with the Active wire and all three mains wires are then terminated into a standard dual, switched mains socket on the front of the box. The box is powered from a wall socket.

I generally power any mains-powered equipment under test into the protected socket on the load box. If there is an internal short or other, similarly-nasty electrical fault present, the lights glow to let me know while they limit the voltage applied to the load, giving me time to switch everything off safely without the drama of blowing fuses or the guts of the device under test flying across the workbench.

I also have an adjustable auto-transformer (generally known as a Variac, but mine isn't Variac-branded) and I

Servicing Stories Wanted

Do you have any good servicing stories that you would like to share in The Serviceman column? If so, why not send those stories in to us?

We pay for all contributions published but please note that your material must be original. Send your contribution by email to: editor@siliconchip.com.au

Please be sure to include your full name and address details.

use that for similar jobs, especially those where it is more prudent to slowly bring up the voltage than apply it all at once. I mostly use the lightbulb load box for mains-powered stuff though, especially valve amps and similar devices.

Both methods save replacing fuses and reduce the risk of damaging other equipment on the same circuit, and both are invaluable to the serviceman who needs to work with mains-powered devices and they are well worth the effort of building or purchasing.

As expected, the battery charger did nothing on switch-on. No bright lights on the load box and nothing on the front panel of the charger. For all intents and purposes, it was as if I hadn't plugged it in.

Delving into its innards

My first thought was a blown fuse. There must be one, and while some chargers have a fuse socket accessible from the outside, this model didn't, so it had to be inside. Getting in was easy enough, with only four long, PK-style screws holding the case together at each corner.

It is refreshing to be able to open up something without having to resort to cruder methods of removing those ridiculous and unnecessary "security" fasteners that seem to be all the rage these days.

It's also getting increasingly rare to find the screws out in the open and easily accessible to normal tools, instead of being buried inside deep channels or concealed under rubber feet, plastic bungs or warranty seals.

Once the screws were out, the case split apart easily and the various components were laid bare. There indeed was a fuse, in line with the Active lead and right next to the cable clamp. The fuse was obviously intact as I could see it clearly, but I popped it from its holder and checked it with my meter anyway.

If it was dead, it wouldn't be the first time a fuse appeared undamaged but was, in fact, open-circuit; a classic beginner's trap. In this case, though, the fuse rang out OK. On to the next component in the troubleshooting queue: the transformer.

This also looked OK but then again, something would have had to fail catastrophically for it to appear otherwise. I measured the secondary windings and got around 0.5Ω on my analog multimeter; probably not that accurate a reading but at least it had continuity. When I measured the primary though, it appeared to be open circuit.

A current surge might have burned out the windings but I could see no darkening of the yellow tape they typically use to bind transformer coils with and there wasn't even the faintest whiff of that distinctive burnt-enamel smell that almost always goes hand-in-hand with high-current component failures. I'd have to dig further.

After making a note of what went where, I desoldered the transformer's wires and removed the four screws going down through the laminations and holding it to the bottom of the case. I do like these simple-to-disassemble devices.

With the tranny out and sitting on the bench, I re-measured the windings with another meter just to be thorough but got the same result; the primary side was definitely open-circuit. Ordinarily, this is where most servicemen/repairmen would start looking for a replacement transformer but as I've already made clear, I hate throwing things away (that curse again).

Anyway, without having any part numbers or any other information written on the component, I'd have to either take an educated guess as to its specifications or assess other, similar chargers to determine or approximate the voltages and ratings of their transformers.

Either method would likely lead me to a replacement component that would be close enough for rock and roll – it's a car battery charger after all – but that's a bit too wishy-washy for my liking. Besides, I wasn't finished with this dead transformer yet.

Fixing it the hard way

I started by removing as much of the yellow tape that bound the windings as possible, a task made difficult by the way the E-I core kept getting in the way. I got out one of my craft knives and slid the edge of the blade between two of the hundreds of tightly-laminated shaped metal shims that make up the core.

It went in relatively easily, meaning the laminations weren't potted or bonded together with varnish, as some are. I removed the transformer's folded heavy-metal outer cover by bending four metal locking tabs on the base out of the way and lifting it clear.

BY USING WOOD-WORKERS' CLAMPS & A LOT OF VERY COLOURFUL LANGUAGE

With the core now totally exposed, I used a sharpened flat screwdriver to carefully pry free a couple of the E and I-shaped laminations from one side. Now loosened, I could ease out the rest of the laminations one by one until there was a large pile of them lying on the bench.

What remained was a hard, white plastic bobbin that held the primary and secondary windings, and it was a simple matter to strip the remaining yellow tape away from the primary side. Once gone, I could see nestled at the very top of the now-exposed windings a black, rectangular, two-legged component that I assumed to be a thermal fuse, wired in series with the primary winding.

I already knew it would be open circuit, as the clean state of the windings showed nothing had burned out but I measured it anyway. It was dead as John Cleese's parrot. I unsoldered it and measured the windings beyond it. My meter made it around 50Ω and whether that was about right or not I'll leave to the mathematicians; all I needed to know was that it seemed about right to me.

I located another thermal fuse in my parts store, which according to the data sheets I downloaded from the web was a suitable substitute for the original. Once soldered in, I re-bound the primary windings with similar tape and set about re-assembling the core, a grubby job as each one is coated in an anti-corrosion substance that if not

actually oil, has very much the consistency and feel of it.

However, after I'd stuffed as many of the laminations back into the bobbin as I could, I still had about a dozen "E"s and "I"s left over. No biggie, or so I thought.

After a quick megger check to make sure my insulation was good, I temporarily rigged up a mains cable to the primary and used my auto-transformer to power it up slowly. My multimeter showed the secondary voltage rising as expected as I wound up the power, but then it happened; the transformer started to buzz.

Above about 150VAC, the transformer was buzzing very loudly; I guess I was going to need those extra laminations after all! By using some wood-workers' clamps and a lot of very colourful language, I managed to shoe-horn all the remaining laminations back into the core. It was then thankfully buzz-free.

That just left the simple matter of reassembling everything, giving it another insulation test and trying it out. It worked as well as it did before and while those LEDs were barely visible, my neighbour was hugely relieved and grateful. He offered to pay, but I declined; it was the neighbourly thing to do. Darn this Serviceman's Curse!

CIG Transmig 200 welder repair

Sometimes it doesn't take a large fault to stop equipment worth thousands of dollars from working. G. S., of Castle Hill, NSW, recently saved a heavy-duty welder from the boneyard and here is how...

My ex-neighbour Paul is into old Ford Falcons from the 1960s. He restored a '64 ute some three years ago and has two 1964 2-door coupes awaiting restoration. He also recently acquired a '63 Falcon station-wagon that he's working on at the moment.

Sitting in his garage among that lot is a real gem – a 1967 Ford Mustang coupe that's currently a body shell and a pile of parts. So why is he mucking around with the Falcon station-wagon and not putting all his effort into the Mustang restoration? I dunno but he'll come up with all sorts of excuses if pressed on the matter!

Vehicle restoration projects invariably require rust repairs and so, about eight years ago, Paul acquired a second-hand CIG Transmig 200 welder. This is a large 3-phase machine and

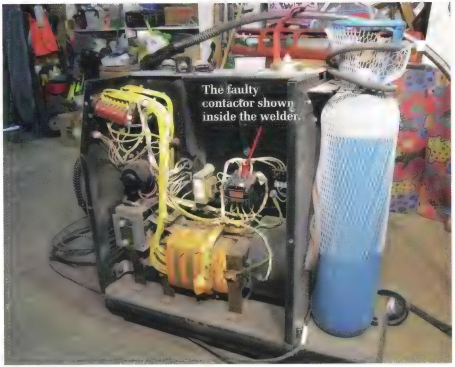
The faulty contactor shown inside the welder.

is mounted on a sturdy metal trolley that can be trundled around in his garage. It probably cost around $3000 new but had been acquired for a pittance by one of Paul's mates when a business shut up shop.

Having no real use for it, the mate eventually passed it on to Paul for an even lesser pittance and he subsequently used it while restoring the ute. It then sat unloved at the back of Paul's garage for three years until he got his station wagon restoration underway.

It wasn't long before the welder was needed for this project and so the machine was duly trundled out and hooked up to the garage's 3-phase power outlet.

Paul then pressed the trigger on the wire-feed nozzle to check its operation but no wire fed through. Instead, the 3-phase circuit breaker in the household fuse-box tripped out.

Puzzled by this, Paul reset the breaker and pressed the wire-feed trigger a second time. The circuit breaker immediately tripped out again and it did so a third time after he had reset it.

At that stage, Paul decided to ask my brother, who is a licensed electrician, to take a look at the machine for him. I went along for the ride and when we got there, we found that Paul had already removed the side panels from the machine.

It took my brother just a few minutes to diagnose a faulty contactor. This normally pulls in and powers up a large transformer and various other parts in the machine when the wire-feed trigger is pressed.

Our snap diagnosis was that the contactor was probably full of gunk and this conclusion was reinforced when my brother demonstrated that the machine could be powered up by manually assisting the contactor to "pull in" by pressing on it with an insulated probe.

Even then, the wire-feed mechanism still wasn't working, so it looked like this welder had two separate faults: (1) a faulty contactor and (2) a fault in the wire feed mechanism or in the circuitry that controls the wire feed motor (or perhaps even a faulty motor).

There was no point trying to diagnose the wire-feed problem until the contactor problem had been resolved, so it was up to Paul, an electrical fitter by trade, to take things from there.

He's not a man to let the grass grow under his feet and so, the very next day, he carefully labelled all the relevant connections, then pulled the contactor out and cleaned it to within a millimetre of its life.

It did indeed prove to have a lot of gunk inside and when it was refitted, he was gratified to find that it now pulled in when the wire-feed trigger was pressed without tripping the circuit breaker. So that solved problem number one.

Now for problem number two. With no access to a manual, circuit diagrams or spare parts, Paul figured that his next best step was to seek professional help to get the wire feed mechanism working.

The faulty tantalum capacitor on the control board was replaced with a similar electrolytic capacitor, with the adjacent 7812 regulator circled in red.

As a result, he loaded the machine onto a trailer and carted it off to a specialist welder repair shop. They duly called back a week later to say that both the wire-feed mechanism and motor were OK and that they had diagnosed a faulty control board.

Unfortunately, given the age of the machine (it's probably late 1980s or early 1990s vintage), replacement control boards were no longer available. And as far as they were concerned, without a replacement control board, the machine wasn't repairable.

Never one to give up, Paul now figured that he would try to get the control board fixed. And that's when he flicked the problem my way.

I suggested that the best approach would be to remove the board from the machine and drop it around to me. That way, I could inspect the board for dodgy solder joints and test the various semiconductors, electrolytic capacitors and other parts at my leisure.

Having made the suggestion, I thought he might drop the board off in a week or two but as I said, he's not a man to let the grass grow under his feet. He turned up at my house within the hour, clutching his faulty control board with the external wiring leads all carefully labelled.

I took a look at it the next day. Despite its age, it was still in good condition with no signs of corrosion. Its main parts included a couple of 555 timer ICs, an LM3900 quad amplifier IC, several transistors, a relay, two stud-mount SCRs and a stud-mount diode. The external leads ran off to a couple of pots and some spade clips.

So had one of the semiconductors failed? Or was it a faulty relay, a dodgy capacitor or a dry solder joint? If it wasn't the latter, the easiest approach might be to simply blanket-replace the ICs and transistors and check out the SCRs, the diode and the relay.

It didn't come to that though, because I quickly spotted what was almost certainly the cause of the problem. There were five 10µF 16V tantalum capacitors on the PCB, two of them in the timing circuits of the 555 timers. Four of these tantalums were dark blue but the fifth had turned a pale blue colour with a greenish band across it.

Surely it wasn't going to be this ridiculously easy? I stuck a multimeter across the capacitor and it registered a dead short! I then traced the PCB tracks from the capacitor and found that it was across the output of an adjacent LM340T-12 12V regulator.

This device is mounted on a small heatsink in one corner of the board and provides a regulated 12V rail to the 555 timers and the quad amplifier (and possibly also the relay).

I removed the capacitor and the short across the regulator's output disappeared. I then replaced it with a 10µF 16V electrolytic that I had on hand. Two other 10µF bypass tantalums on the PCB were also replaced with electrolytics, while those in the timing circuits of the 555 timers were left in place.

In theory, the LM340T-12 should have survived since these devices are short-circuit proof. However, I replaced it with an equivalent 7812 regulator as a precaution, along with an adjacent electrolytic capacitor for good measure.

At that stage, it was tempting to apply power to the circuit and check the operation of the 555 timers. However, not having a circuit diagram (no luck with Google), I was afraid that this might risk damaging something, especially if two of those external leads shorted together.

The best bet would be to test the control board in the welder itself. I called Paul and told him what I had found. He was on my doorstep some 25 minutes later, collected the part and shot back home to refit it.

I was cautiously hopeful that it would now work and I didn't have to wait long to find out. An ecstatic Paul was back on the phone an hour later and he was floating somewhere between his Mustang chassis and seventh heaven. "You're a genius", he exclaimed. "The welder is working perfectly!"

There's nothing like a bit of flattery to massage the ego but at the end of the day, this was really a joint effort. My brother diagnosed the faulty contactor, Paul fixed the contactor, the service centre correctly diagnosed a faulty control board and yours truly fixed the control board.

So a part costing less than a dollar was all that prevented this valuable welder from working. It's since been used to weld some fresh sheet metal into that old Falcon station wagon but it's the Mustang restoration that I reckon he should be getting stuck into.

Editor's note: older Tantalum capacitors seem to go short circuit more often than you might expect so it's well worth taking a good look at any such capacitors first when repairing something made before the year 2000 or so.

Compaq CQ61 laptop repair and refurbishment

B. P., of Dundathu, Qld, spent quite some time refurbishing and repairing an old laptop for his wife to use. In the process, he discovered and fixed some classic laptop hardware problems and also ran into some time-consuming software pitfalls...

Our daughter has just started university. After five years of intensive use, her old laptop was well and truly the worse for wear, so she bought herself a new laptop and she gave us her old one when she came home during her mid-year break.

When I assessed the old laptop, it was in a rather dilapidated condition. The keyboard had one key cap missing on the numeric keypad and most of the top row of keys (numbers and symbols) no longer worked.

The top silver layer of the touchpad was also worn off in places, revealing the black base colour, the keyboard surround had a lot of the black paint worn off it and the lid hinges were loose. Although the laptop still worked, it was certainly beat up.

I started the repair by removing the old keyboard, by undoing the securing screws on the bottom of the laptop. I ordered a new keyboard and while waiting for it to arrive, decided to con-

tinue working on it by plugging in a USB keyboard.

This allowed me to do a factory reset so that we could start with a fresh copy of Windows 7. After that was done, I uninstalled all the trial software and I installed some additional programs that were needed. Then I partitioned the 500GB hard drive into two separate partitions so that data could be stored on the D:\ drive, separate from the operating system on C:\.

I noticed some issues with the Compaq factory version of Windows 7 that I wasn't happy with, so I decided to do a fresh install of Windows 7 from an OEM disc (ie, one purchased from Microsoft) instead.

This all went well, but then I noticed that the webcam driver was not installed in Device Manager; it was showing up as an unknown device. I tried to locate the correct driver for the webcam on the internet, however, this proved difficult. I did eventually find the driver and installed it but when I went to test it with Skype, Skype said that it was already in use by another program. It wasn't, though.

I thought I would try uninstalling the webcam driver in Device Manager and then scanning for new hardware. This did not work, as the webcam then showed up as an unknown device again. I decided to do another factory reset to try to get the webcam working correctly but because I'd altered the hard drive partitioning, the restore partition was no longer present.

I still had the set of three restore discs that we'd made when the laptop was new, so I decided I would just use those.

I set about restoring the laptop from those discs, but when I got to disc three, it had a read error, so the factory reset failed. This left me with a blank hard drive. That meant using the OEM disc to reinstall Windows 7 again. So I was back to square one, with the webcam still showing up as an unknown device.

I then realised that we had a related Compaq laptop model, a CQ42, that uses the same HP-101 webcam. I checked what driver the webcam used and it was a standard Windows driver. I'd recently installed Windows 7 on the CQ42 without any issues and Windows had found and installed the webcam, so I wondered why I was having so many problems with the CQ61's webcam.

I then tried to tell Windows to use the driver that it should be using, but this idea didn't work out and I was still in the position of not having the webcam working. At this point, I decided to give the laptop a rest and do something else.

I went to my shed to look for something and when I opened a box to check inside it, I discovered another Compaq CQ61 that I'd been given some time ago that I'd forgotten about. This CQ61 was a cheaper variant with much lower specifications than the one I was working on, so I would use it for parts.

I started dismantling it with the intention of using the top case half to replace the well-worn top case half on the one I was fixing. The touchpad still had its original silver colour and the keyboard surround was still in as-new condition.

These new parts would make a huge difference to the original one. Unfortunately, the keyboard on this laptop was also faulty and unusable.

After unscrewing a multitude of screws, I had the donor laptop fully dismantled and I retrieved the parts that I wanted to use for the refurbishment. Then I turned my attention to the laptop I was working on and I dismantled it. I was now ready to reassemble it, using the better parts from both laptops.

Before proceeding further, I decided to give the interior a good clean because there was a considerable amount of dust inside it from the many years of heavy use. I used a small paintbrush with natural bristles in order not to generate static electricity while brushing the dust off the motherboard components.

When I got to the heatsink, I removed the fan for cleaning and I noticed that there was a thick layer of dust on the inside of the heatsink's fins, where the fan had been blowing air through it.

This dust was removed and the fan was then thoroughly cleaned, before being refitted. This is a very common problem with older laptops and often causes them to overheat and either lose performance or become unstable.

It was fortunate that I had stumbled across the other laptop and as a result, decided to take apart the one I was working on because if I hadn't done so and cleaned it out, chances are I would have run into some of these problems later.

At this point, I decided to also transfer the lid assembly from the donor laptop (including the display and webcam) because it was in slightly better condition than the original lid. By this time, I was also suspecting that the original webcam may be faulty, so this was the perfect opportunity to test this theory.

With the laptop partly assembled, I propped the lid against a box, so that I could connect it up and test the screen and the webcam. Once booted, I checked Device Manager and the webcam was now installed. I loaded Skype and tested it and it now worked, indicating that the original webcam had been faulty all along.

I then noticed that there was a problem with the replacement screen, as it had several dead pixels in the lower right-hand section of the screen. This blemish was not that bad and it would not make a huge difference to the laptop, but seeing that the original screen was in better order, I would swap them over.

I dismantled the lid and fitted the original screen to it and then I reassembled it and continued with reassembling the laptop. It's very important to take particular note of which screws go where when reassembling a laptop.

There are around five different length screws in some laptops and each screw must be used in the correct location to prevent damage (when putting a long screw in where a short one should go).

After a bit more work, the laptop was reassembled and back in working order again, except for the keyboard. I was still waiting for the replacement. In the meantime, my wife could just use the laptop with the USB keyboard. Eventually, the replacement keyboard arrived and I fitted it; the laptop was then fully refurbished and it has a new lease on life.

This laptop is now around seven years old and it would be classified as being quite outdated. But it's still quite suitable for light duty work, such as web browsing, emailing, letter writing and other general duties.

For a bit of work and less than $20 for the replacement keyboard, it's as good as new. That's a lot cheaper than buying a new laptop, even a basic one, and it's still perfectly adequate for most jobs and uses less electricity than a desktop computer.

Having the donor laptop on hand certainly saved me quite a bit on replacement parts and resulted in a more cosmetically appealing end result with the new top case shell to replacing the well-worn old one.

This was my first major laptop repair and I was surprised that it was nowhere near a difficult as I had imagined it would be. It's simply a matter of proceeding with caution and paying close attention to details.

There are also plenty of videos on YouTube which go into considerable detail about laptop repairs but I managed to do the refurbishment without referring to any.

MR16 LED downlight repair

D. M., of Toorak, Vic, had a 12V MR16 LED downlight fail far short of its claimed 20,000+ hour lifespan. It would have been cheaper to just buy a new one but he wanted to know what had gone wrong so set to taking it apart...

I wanted to know what had failed inside the MR16 LED lamp as I find the claims for LED downlight life expectancy, typically of 20,000 to 50,000 hours, quite unlikely.

At eight hours per day, that would amount to a service life of 7-17 years. Although LED downlights have not been available for 17 years, in my experience, most such lamps don't even last seven years.

My particular light was a Muller-Licht (house brand) Reflektor rated at 320 lumens and 5W. I carefully examined the light to determine how it might be disassembled without damage.

I found I could gently pry the top retaining ring off the body with a knife which also caused the release of the light diffuser, revealing the LEDs and their heatsink.

Two Phillips-head screws could then be removed from the heatsink, allowing the separation of the top and base portions of the light assembly (see photos at right).

LED lights typically contain a driver which delivers a constant current to the LEDs. I quickly determined that it was the driver that had failed as when power was applied directly to the LEDs, they lit up. I decided to obtain and install a suitable replacement driver.

I found one online that was rated at the same current as the LEDs, 650mA and only cost about $2.50. This driver has pins attached with the correct size and spacing to plug into an MR16 socket.

So these could be used to replace the existing pins on the lamp body, or alternatively, they could be desoldered from the driver if necessary for other applications.

The driver utilises a PT4115 chip. The website where I bought it has details of the circuit; see siliconchip.com.au/link/aajr

I removed the old driver from the LED body and then the old MR16 pins. Be careful removing the old pins as it is easy to break the plastic body. In this lamp, the pins were hollow.

You may be able to cut them and then drill through to remove them (with a very small diameter drill). I tried twisting them with pliers which ended up cracking the body of the case.

Alternatively, it might be easier to leave the pins in place and desolder the old driver, then solder them to the new driver board. The driver is housed in the otherwise empty "well" in the base of the lamp, just above the pins.

Having soldered the new driver in place, I glued the ends to ensure the pins would not move. Make sure any conductive parts that might contact each other to cause a short circuit are appropriately insulated. The lamp worked fine after that and so I put it back into service.

This particular lamp replaced an existing halogen downlight and is driven by an old-style iron core transformer supplying 12VAC. These transformers are not as efficient as more modern electronic ones but they do work with LED replacement lamps.

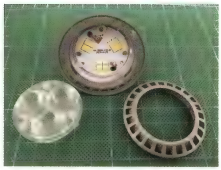

Prying off the cover revealed the retaining ring, diffuser, LEDs and their heatsinks.

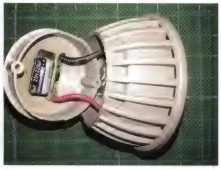

After removing two screws the LED enclosure could be separated showing two leads attached to a driver PCB. The LED driver shown above is the replacement one and is mounted differently to the old driver.

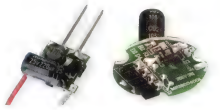

Left: the replacement MR16 driver. Right: the failed MR16 driver.

Some modern electronic "transformers" designed for use with halogen lamps will not work with LED replacements as they do not draw enough current (or perhaps it's because they're a non-resistive load).

There are many different designs of LED downlight. Some such as the one described here might be relatively easy to disassemble, others might be more difficult or impossible. Note that type of repair is not very economical, especially if you include your time in the calculation but I found the job to be both fun and educational. SC

Look after your Lithiums!

2x 12V Battery Balancer

By Nicholas Vinen

Two 12V batteries are often significantly cheaper than one equivalent 24V battery but you need to be careful connecting batteries in series as their voltages and state-of-charge may not be identical. The difference in voltage can increase over time, leading to battery damage from over-charging and/or under-charging. This compact, low-cost device keeps them balanced so that they last a long time.

On page 28 of this issue, we describe a high-performance Uninterruptible Power Supply (UPS) you can build yourself, that uses two 12V $LiFePO_4$ batteries wired in series to form a 24V battery.

This was a much cheaper solution than buying a 24V battery with equivalent performance, even taking into account the $100 or so we paid for a commercial battery balancer.

You can build this balancer for a lot less than that and it will do a similar job.

Our version can't handle quite as much current, because it lacks the large heatsink.

But you can easily parallel several of our balancers if you need a higher current capacity and the cost would still be quite reasonable.

It can be used with pretty much any battery chemistry, as long as the battery voltages will stay within the range of 5-16V.

Balancing is most critical with lithium-based rechargeable batteries, though, because they tolerate overcharging much less than a similar lead-acid battery would.

This design incorporates a low-voltage cut-out which prevents the batteries being discharged too far if it is unable to keep them balanced and its very low quiescent current of under 0.02mA means it will have virtually no effect on battery life.

It also incorporates a LED to show when it is monitoring the battery voltages and two more LEDs to show when one or the other is being discharged or shunted.

By default, the low-voltage cut-out is set up so that the batteries are only balanced when they are being charged, however, there are definitely situations where you might want the batteries to be balanced during discharge, too.

In that case, you just need to change a resistor or two in order to adjust the cut-out threshold so it is near the minimum battery voltage. In this case, the cut-out will still act to protect the batteries but will allow balancing during charging and discharge, right down to that lower threshold.

It's a compact unit at just 31.5 x 34.5 x 13mm,

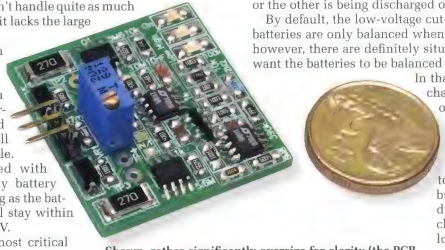

Shown rather significantly oversize for clarity (the PCB measures only 31.5 x 34.5mm) – see the $2 coin for reference – all components mount on this single board.

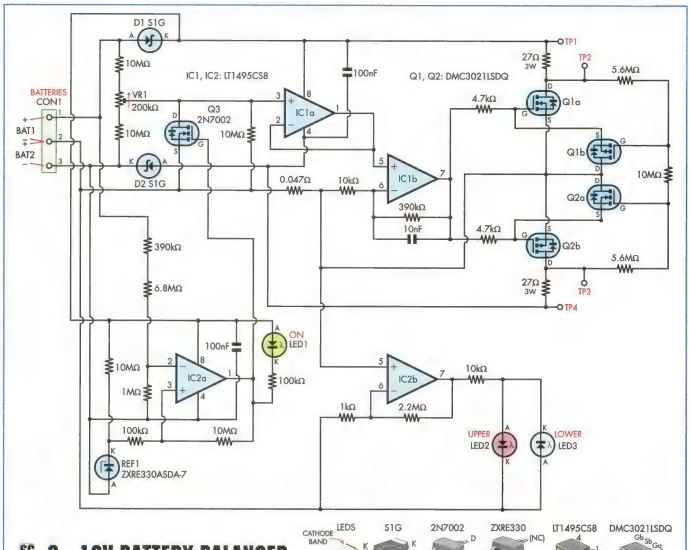

SC 2 x 12V BATTERY BALANCER

Fig.1: the circuit for the Battery Balancer, shows the balancing section at top and low-voltage cut-out at bottom, based around dual micropower op amps IC1 and IC2 respectively. IC1 drives dual Mosfets Q1 & Q2 to perform balancing while necessary; IC2 drives the indicator LEDs and disables IC1 using Mosfet Q3 when the battery voltage is low.

so you can tuck it away inside just about any device. And if the 300mA balancing current is not sufficient for your purposes, all you need to do is wire two or more units in parallel and they will operate in concert to keep the batteries balanced.

Balancing operation

There are two sections to the circuit; the balancer and the low-battery cut-out. The entire circuit is shown in Fig.1, with the balancing circuitry in the top half and the low-voltage cut-out below.

Starting with the balancing section, schottky diodes D1 and D2 are connected in series with the two batteries so that no damage should occur if they are wired up incorrectly. These diodes are then connected to Mosfets Q1a and Q2b at the right-hand side of the circuit diagram, via a pair of 27Ω 3W resistors.

These Mosfets are normally switched off and no current can flow through them. If the voltage across one battery rises by more than 100mV above the other, the Mosfet across that battery is switched on.

If the battery is being charged, this has the effect of shunting some of the charge current around that battery so that it receives a lower charging current than the other, decreasing the voltage differential over time, as the battery with the lower voltage is then receiving more charging current.

If the unit is operating while the battery is not being charged, the effect is to slightly discharge the battery with the higher voltage until they are closer in voltage.

It's a linear circuit so the shunt current is proportional to the difference in voltage. As the imbalance rises, so does the shunt current until the limit of around 300mA is reached. This is to prevent the Mosfet and resistor from overheating.

Detecting a voltage difference

A resistive divider comprising two 10MΩ resistors and 200kΩ trimpot VR1 is connected across the battery, before diodes D1 and D2 so that their forward voltage does not affect the calculation of the difference in voltages.

VR1 is adjusted so that the voltage at its wiper is exactly half that of the total battery. This half-battery voltage is buffered by voltage follower op amp IC1a.

Features & specifications

- Minimum battery voltage: *5V*
- Nominal battery voltage: *12-13V*
- Maximum battery voltage (fully charged): *16V*
- Battery voltage difference for balancing to start: *approximately 100mV*
- Battery voltage difference for maximum balancing current: *approximately 130mV*
- Maximum balancing current: *approximately 300mA (multiple units can be paralleled)*
- Maximum balancing power: *approximately 4.5W (multiple units can be paralleled)*
- Maximum recommended charging current: *10A per unit*
- Quiescent current: *< 20µA*
- Low-voltage cut-out threshold: *27V (can be changed)*
- Low-voltage cut-out hysteresis: *0.25V*

This op amp has a very high input resistance of around 40GΩ, resulting in a low input bias current of approximately 250pA, so the high values of these resistors (chosen to minimise the quiescent current) will not result in a large error voltage.

The other half of the dual op amp, IC1b, compares the voltage at the junction of the two batteries (from pin 2 of CON1) to the output voltage from IC1a. If the upper battery has a higher voltage than the lower battery then the half-battery voltage will be higher than the voltage at pin 2 of CON1. That means that the voltage at non-inverting input pin 5 will be higher than at the inverting input, pin 6.

As a result, IC1b's output will swing positive. The ratio of the 390kΩ feedback resistor to the 10kΩ resistor that goes to the battery junction (ie, 39:1) means that the output will increase by 40mV for each 1mV difference in battery voltages.

Once the voltage at output pin 7 has risen by a couple of volts, N-channel Mosfet Q1a will switch on as its gate is being driven above its source, which connects to pin 2 of CON1 via a low-value shunt resistor (47mΩ).

So current will flow from the positive terminal of the upper battery, through diode D1, the 27Ω 3W resistor, Mosfet Q1a and then the 47mΩ resistor to the negative terminal of the upper battery.

Once this current starts to flow, it will also develop a voltage across the 47mΩ resistor which will increase the voltage at pin 6 of IC1b, providing negative feedback. This feedback is around 1mV/20mA, due to the shunt value.

This prevents Q1a from switching fully on. Rather, its gate voltage will increase until the current through the 47mΩ resistor cancels out the difference in the two voltages.

Hence, the maximum shunt current of 300mA will be achieved with an imbalance around 130mV (100mV + 300mA x 0.047Ω ÷ 2).

The 10MΩ resistor between pin 3 of IC1a and pin 2 of CON1 serves mainly to prevent the balancer from operating should the junction of the batteries become disconnected from CON1. It also makes setting the unit up and adjusting VR1 easier. It has a negligible effect on the voltage at pin 3 since there's normally such a small voltage across it.

Current limiting

Had we specified 68Ω resistors in series with Q1a and Q2b (rather than 27Ω), there would be no need for additional current limiting circuitry since the resistors would naturally limit the balancing current within their dissipation ratings.

However, this would mean that at the maximum balancing current, all the dissipation would be in this resistor and none in the Mosfet, meaning the maximum current would be 200mA [14V ÷ 68Ω].

We realised we could increase this by 50% by splitting the dissipation between the Mosfet and its series resistor. The resistor has a 3W rating while the Mosfet has a 2W rating, giving the possibility of a total of just under 5W. With a battery voltage of 29V and a balancing current of 300mA, dissipation is around 2.7W in the resistor and 1.7W in the Mosfet.

We achieve this dissipation sharing by preventing the Mosfet from turning on fully and using a lower value limiting resistor. This is the purpose of Q1b and the three resistors between TP2 and TP3.

These resistors bias the gate of Q1b at a voltage that's initially about halfway between the negative and positive terminals of the upper battery (ie, at a voltage between that of pins 1 & 2 of CON1). However, as the balancing current for the upper battery increases, the voltage at the junction of the 27Ω resistor and Q1a drops and therefore so does Q1b's gate voltage.

Q1b is a P-channel Mosfet and so it switches on when its gate is a few volts below its source terminal. The source terminal is connected to the gate of Q1a, which is about 2V above pin 2 of CON1 when Q1a is in conduction.

So as the current through Q1a builds and Q1b's gate voltage drops, eventually Q1b begins to conduct, pulling the gate of Q1a negative and cutting it off. This forms a negative feedback path and due to the gate capacitances, the circuit stabilises at a particular current level.

With 300mA through the 27Ω resistor, the voltage across it will be 8.1V [0.3A x 27Ω] and this translates to a gate-source voltage for Q1b of around -2V, ie, just enough for it to conduct current. The 4.7kΩ resistor between output pin 7 of IC1b and the gate of Q1a prevents Q1b from "fighting" the output of the op amp too much.

Note that 8.1V is slightly more than half the typical voltage of one 12V battery and this is why the resistor dissipates slightly more than the Mosfet, in line with their ratings.

Balancing the other battery

The other half of the balancing is a mirror-image; for balancing the lower battery, Mosfet Q2b is a P-channel type and thus switches on when its gate is driven below its source. As with Q1a, its source is connected to the junction of the two batteries via the 47mΩ resistor.

When the lower battery voltage is higher than the upper battery, output pin 7 of IC1b goes negative, switching Q2b on.

And the same current-limiting circuitry is present but this time, Q2a is an N-channel Mosfet, so that as current builds through the lower 27Ω resistor and the voltage at the junction of it and Q2b rises, Q2a switches on and limits the current to a similar 300mA value, with roughly the same dissipation split between the two components.

A 10nF capacitor across IC1b's 390kΩ feedback resistor slows down its action so that it doesn't react to any noise or EMI which may be present at the battery terminals (eg, due to a switchmode load).

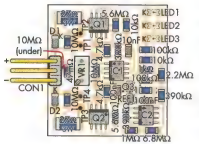

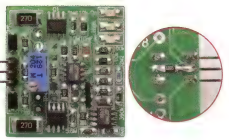

Fig.2: use the PCB overlay diagram at left and matching photo at right as a guide to assembling the PCB. Only one SMD component (a 10MΩ resistor)is soldered to the bottom, the rest go on the top as shown. The main aspects to pay attention to during constructon are that the semiconductors are correctly orientated and that you fit the resistors and capacitors in the correct locations.

It also prevents the circuit from oscillating due to the negative feedback and the action of the current limiters.

Under-voltage cut-out

Commercial battery balancers tend to only operate when the battery voltage is near maximum, as this is when they are being charged. That avoids the possibility of the balancer discharging the batteries when they are under load.

However, we're not convinced this is a good idea. It's possible to have a sufficient initial imbalance that one battery could be over-charged before the balancer even activates. And full-time balancing also has the advantage that it can start re-balancing the cells as soon as an imbalance occurs, which also avoids over-discharge and gives it more time for re-balancing.

There is one other advantage to having a higher under-voltage lockout threshold and that is that it will prevent the balancer being triggered due to differing internal resistance of the batteries when under heavy load. This could create a voltage difference between the batteries even when they are at an equal state of charge.

If you want the balancer to be active even when the batteries are not being charged, you still need the under-voltage lockout circuitry to prevent the balancer from over-discharging either battery. But in that case, you would change its threshold to be close to the fully-discharged voltage of your combined battery.

For a pair of lithium-based 12V rechargeable batteries, this would normally be around 20V total.

That's to protect against the case where one battery has a failure (eg, shorted cell) which causes its voltage to drop dramatically. The under-voltage detection circuitry will then prevent the balancer from over-discharging the other battery in response, and potentially destroying it. See the section below on how to change the cut-out threshold if you want to take this approach.

The increased battery drain of the low-voltage cut-out section is only about 10μA. As a bonus, it drives the three LEDs to indicate when the balancer is operating and which battery is being shunted.

This is implemented using IC2a, another LT1495 op amp. Its positive supply is the same as for IC1a but its negative supply is connected directly to the negative terminal of the bottom battery, allowing it to sense the total battery voltage

BACK TO THE FUTURE

Many years ago, long before the days of smartphones and computers, even before the days of television, it was considered a "right of passage" for dads to sit down with the sons (or daughters) and help them as they built their own radio receiver. FM? Not on your life – no such thing! DAB+? Hadn't been invented yet! No, it was all good, old reliable AM Radio. And they could listen to stations hundreds, perhaps thousands of miles away! The beauty of it all was that they were building something that actually worked, something they'd be proud to show their friends, to their school teachers, to their grandparents!

Enjoy those days once again as they build the SILICON CHIP Super-7 AM Radio

See the articles in November & December 2017 SILICON CHIP (www.siliconchip.com.au /series/321)

- Covers the entire AM radio broadcast band.
- Has on-board speaker ... or use with headphones.
- SAFE! –power from on-board battery or mains plug-pack
- Everything is built on a single, glossy black PCB.
- All components readily available from normal parts suppliers
- Full instructions in the articles including alignment.
- See-through case available to really finish it off!

IT LOOKS SO GOOD THEIR FRIENDS WON'T BELIEVE THEY BUILT IT!

(ie, between pins 1 and 3 of CON1) more easily.

This is done using a string of three resistors (390kΩ, 6.8MΩ and 1MΩ) connected across the batteries. These form a divider with a ratio of 8.19 [(390kΩ + 6.8MΩ) ÷ 1MΩ + 1]. The divided voltage from the battery is applied to inverting input pin 2 of IC2a.

A 3.3V reference voltage is applied to the non-inverting input at pin 3. This is provided by micropower shunt reference REF1, which is supplied with around 2μA via a 10MΩ resistor. The voltage at pin 2 of IC2a is therefore above the voltage at pin 3 when the battery voltage is above 27V [3.3V x 8.19].

When this is the case, output pin 1 of IC2a is driven low, pulling the gate of N-channel Mosfet Q3 to the same voltage as the negative terminal of the bottom battery. As the source of Q3 is connected to the junction of the two batteries, Q3 is off and so does not interfere with the operation of the balancer.

However, should the total battery voltage drop below 27V, the output of IC2a goes high, switching on Q3 and effectively shorting input pin 3 of IC1a to the junction of the two batteries. This means that the voltages at pins 5 and 6 of IC1b will be equal (with no current flow through the 47mΩ resistor, as will quickly be the case), therefore preventing any balancing from occurring.

When the output of IC2a goes high, this also causes a slight increase in the voltage at its pin 3 input, due to the 10MΩ feedback resistor. This provides around 1% or 250mV hysteresis, preventing the unit from toggling on and off rapidly. In other words, the battery voltage must increase to 27.25V to switch the balancer back on.

When the output of IC2a is low and the balancer is active, IC2a also sinks around 0.25mA through LED1 and its 100kΩ series resistor, lighting it up and indicating the balancer is operating.

And when one or the other battery is being shunted, IC2b amplifies the voltage across the 47mΩ shunt by a factor of 2200 times. So if there is at least 20mA being shunted, that results in around 1mV across the 47mΩ resistor which translates to 2.2V at output pin 7 of IC2b, enough to light up either LED2 or LED3. LED2 is lit if it's the upper battery being shunted and LED3 if it's the lower battery.

Changing the cut-out voltage

To change the cut-out voltage, simply change the values of the 6.8MΩ and 390kΩ resistors using the following procedure. First, take the desired cut-out voltage and divide by 3.3V. Say you want to make it 24V. 24V ÷ 3.3V = 7.27. Then subtract one. This is the desired total value, in megohms. So in this case, 6.27MΩ.

This can be approximated a number of ways using standard values. For example, 3.3MΩ + 3.0MΩ = 6.3MΩ which is very close. So use these values in place of the 6.8MΩ and 390kΩ resistors.

Keep in mind there will still be around 1% hysteresis, so the switch-on voltage will be about 24.24V.

Two more examples would be a 22V cut-out, which would require 5.67MΩ total; you could use 5.6MΩ + 68kΩ. Or for a 20V cut-out, you would need 5.06MΩ which could be formed using 4.7MΩ + 360kΩ.

Paralleling multiple boards

As stated, one board can handle around 300mA and will dissipate up to around 4.5W. If you're using a 3A charger, that means it can handle a ~10% imbalance in charge between batteries (which would be unusually high).

However, with a 10A charger, it will only handle a ~3% imbalance, with a 20A charger ~1.5% etc. A greater imbalance could potentially lead to over-charging as the balancer can't "keep up". So if your charger can deliver more than 5A, you may want to consider paralleling multiple balancers and we would strongly recommend it for a charger capable of 10A or more.

When properly adjusted, the balancers will share the load. Realistically, one of them will start balancing first but if it's unable to keep the imbalance voltage low, the others will quickly kick in and shunt additional current.

Since the only external connections are via 3-way pin header CON1, you could simply stack the boards by running thick (1mm) tinned copper wire through these pads and soldering them to each board in turn. You can then solder the battery wires to these wires.

Sourcing the parts

The PCB is available from the Silicon Chip Online Shop – simply search for the board code 14106181.

All the other parts are available from Digi-Key. While they are based overseas (in the USA), you can pay using Australian dollars and they offer free courier delivery for orders of $60 or more. You can find the semiconductors on their website by searching for their part number and then narrowing down the list (eg, ignoring listings which are out of stock or only sold in large quantities).

For the other, more generic parts like SMD resistors, you can find them by searching for (for example) "SMD resistor 1206 4.7k 1%" and then sorting the result by price. The cheapest part which matches the specifications should do the job just fine. But be careful because sometimes the search results include parts with different properties than you are expecting. You will need to skip over those.

Mouser, another large electronics retailer based in North America, will almost certainly have all the required parts too. And if you don't want to order from overseas, chances are that you can get most of them from element14 (formerly Farnell; http://au.element14.com).

Construction

The 12V Battery Balancer is built on a small double-sided PCB measuring 31.5 x 34.5mm and uses mostly surface-mounted parts. These are all relatively large and easy to solder. Refer to the overlay diagram, Fig.2, to see where each component goes on the board. Some of them (the ICs, Mosfets, diodes and trimpot) are polarised so be sure to fit them with the orientation shown.

There are two small SOT-23 package devices, Mosfet Q3 and voltage reference REF1. Fit these first. They look almost identical so don't get them mixed up; only the tiny coded markings on the top of each set them apart.

Tack solder the central pin to the pad in each case then check that the other two pins are centred on their pads and that all pins are in contact with the PCB surface. If not, reheat the initial solder joint and nudge the part into place. Then solder the two remaining pins and add a little extra solder to the first pin (or a bit of flux paste and heat it) to ensure the fillet is good.

Next, solder IC1, IC2, Q1 and Q2. They are all in eight-

pin packages and must be orientated correctly. Identifying pin 1 can be a bit tricky. For IC1 and IC2, you have to find the chamfered edge which is quite subtle. Pin 1 is on that side. Q1 and Q2 have pin 1 marked by a much more clear divot in the corner of the package. But you can also orientate IC1 and IC2 by matching the position of the markings up to our photo.

In each case, make sure the device is positioned correctly and tack solder one pin, then as before, check the locations of the other pads are correct and solder them before refreshing the first joint. If you accidentally bridge two pins with solder, use a little flux paste and some solder wick to clean it up.

The only remaining SMD parts which are polarised are diodes D1 and D2. Fit these now, ensuring the striped end goes towards the top edge of the PCB, as shown in Fig.2 and marked with "K" on the PCB. Then solder the two 3W resistors in place. Follow with the remaining SMD ceramic capacitors and chip resistors as shown in the overlay diagram.

For the two-pin devices, make sure that you apply the soldering iron long enough so that the solder adheres to the PCB and the component. Adding a little flux paste to the PCB pads before positioning the part will make this easier.

There is a single component on the underside of the board, a 10MΩ resistor positioned between CON1 and VR1. Solder it in place but use a minimal amount of solder, so that you don't plug the through-holes underneath. You can add more solder later after CON1 and VR1 are in place.

All that's left then is to solder trimpot VR1 with the adjustment screw orientated as shown, and a pin header for CON1. We used a normal pin header but a polarised header would be a good idea if you're going to use a plug to make connection to the batteries so that it can't be accidentally reversed. If it is reversed, D1 & D2 should prevent damage but the balancer won't work!

Or you can solder the battery wires directly to these three pads. They only need to be rated to handle 300mA per board; medium duty hookup wire should be more than sufficient, even if paralleling multiple boards.

Testing & set-up

Connect your batteries in series, then connect the negative-most terminal directly to the negative terminal on CON1. Do not connect the junction of the two batteries to the Balancer just yet.

Ensure that the total battery voltage is well above the threshold and that they are reasonably close to being balanced. You can ensure they are balanced by charging both independently and then connecting them in parallel via a low-value, high-power resistor (eg, 1Ω 5W) and leaving them for a few hours. The voltage across the resistor should drop to a very low level once their voltages equalise.

Now connect the most positive terminal to the positive pin of CON1 via a 1kΩ resistor and check that LED1 lights up. LEDs 2 & 3 should remain off. Measure the voltage across the 1kΩ resistor. It should be under 20mV. If it's under 5mV or over 20mV, disconnect the battery and check for errors in your PCB assembly or battery wiring.

Assuming the voltage is within the specified range, remove or short out the 1kΩ test resistor and then connect the junction of the two batteries to pin 2 of CON1. LED2 and LED3 may light up. If so, rotate the adjustment screw in VR1 until they are both off.

Now check that there is no balance current flowing by measuring the voltage between TP1 and TP2, and between TP3 and TP4. In each case, the reading should be zero. If you get a non-zero reading between TP1 and TP2, current is flowing through Q1a. And if there's a voltage between TP3 and TP4, current is flowing through Q2b.

Since you started out with balanced voltages, this should not be the case, so adjust VR1 further until you get a zero reading across both pairs of test points. Ideally, VR1 should be adjusted to halfway between the point where the voltage starts to rise between one pair of test points, and the point at which the voltage rises across the other pair of test points. This ensures the balancing will be, for lack of a better word, balanced!

The maximum reading you should get between one pair of test points should be 8.8V. Any more than that and you risk the resistor dissipation rating being exceeded. In this case, disconnect the batteries and change the 10MΩ resistor right next to VR1 on the top side of the board with a slightly lower value (eg, 9.1MΩ or 8.2MΩ) to reduce the current limit.

If that doesn't fix it then it's likely that the current limiting circuitry is not working so you should check for soldering problems or faulty components. SC

Parts list – 2 x 12V Battery Balancer

1 double-sided PCB, coded 14106181, 31.5 x 34.5mm
3 3-way right-angle or vertical pin header (CON1)

Semiconductors
2 LT1495CS8 dual micropower op amps, SOIC-8 (IC1,IC2)
1 ZXRE330ASA-7 micropower 3.3V reference, SOT-23 (REF1)
2 DMC3021LSDQ dual N-channel/P-channel power Mosfets, SOIC-8 (Q1,Q2)
1 2N7000 N-channel signal Mosfet, SOT-23 (Q3)
1 green LED, SMD 3216/1206 (LED1)
1 red LED, SMD 3216/1206 (LED2)
1 blue LED, SMD 3216/1206 (LED3)
2 S1G 1A schottky diodes or similar, DO-214AC (D1,D2)

Capacitors (all SMD 3216/1206 X7R ceramic)
2 100nF 50V (*measure value before installing!*)
1 10nF 50V (*measure value before installing!*)

Resistors (all SMD 3216/1206 1%)
6 10MΩ (Code 1005)
1 6.8MΩ (Code 6804)
2 5.6MΩ (Code 5604)
1 2.2MΩ (Code 2204)
1 1MΩ (Code 1004)
2 390kΩ (Code 3903)
2 100kΩ (Code 1003)
2 10kΩ (Code 1002)
2 4.7kΩ (Code 4701)
1 1kΩ (Code 1001)
2 27Ω 3W (SMD 6331/2512) [eg, TE Connectivity 352227RFT]
1 47mΩ [eg, Panasonic ERJ-L08KF47MV]
1 200kΩ 25-turn vertical trimpot (VR1)

For tips and tricks on soldering SMD components, refer to the Silicon Chip articles "*How to Solder Surface Mount Devices*" in March 2008 www.siliconchip.com.au/article/1767 and October 2009 www.siliconchip.com.au/article/1590

CIRCUIT NOTEBOOK

Interesting circuit ideas which we have checked but not built and tested. Contributions will be paid for at standard rates. All submissions should include full name, address & phone number.

20V, 2.5A Adjustable Power Supply with current limiting

This adjustable power supply is based on the venerable LM723C regulator IC and a handful of low-cost components. It provides an adjustable output voltage of 0-20V and adjustable current limit of 0-2.5A.

When the current limit is reached, the output voltage drops to keep the current constant and LED2 lights to indicate that it is in current limiting mode.

It also provides voltage and current metering (using analog meters) and multiple supplies can be built and connected in series or parallel, to obtain higher voltages or currents.

Normally, an LM723-based regulator cannot have an output voltage lower than 2V but because this design uses the LM723C to drive a separate NPN pass transistor and due to the clever feedback arrangement, the output voltage can be adjusted all the way down to 0V. It will also drop to 0V if short-circuited, due to the built-in adjustable current limiter.

Mains power is switched by DPST switch S1 and passes through fuse F1 to be applied to the primary of 230V to 24V transformer T1 (60VA). Bridge rectifier BR1 and the 3300µF capacitor provide a ~30V DC unregulated supply rail.

A 10nF capacitor across T1's secondary reduces switching interference when the diodes in BR1 go into and out of conduction.

The main regulating transistor is Q4, a 2N3055 configured as an emitter-follower. Current flows from the main filter capacitor to its collector via a 1Ω 7W resistor and 1N5401 3A diode D1, which are used to provide the current limiting feature, as described below. The current from Q4's emitter flows through two parallel 0.1Ω 2W resistors to the output.

These resistors effectively form a 0.05Ω 4W resistor which is used as a shunt to measure the current flow. The voltage across these resistors is 50mV/A and this is translated into a current by trimpot VR3 and fed to the ammeter movement.

Say VR3 is adjusted for a resistance of 125Ω. This will feed 1mA (2.5 × 50mV ÷ 125Ω) to the meter at 2.5A, giving a full-scale reading on a 1mA meter.

If the meter used reads 0-5A, then you would adjust VR3 for 250Ω instead, so that it would reach half-scale at 2.5A.

Similarly, the voltmeter is connected across the output via trimpot VR4. For a 0-20V 1mA meter, you need to feed it 1mA at 20V output, so you would adjust VR4 for 20kΩ. Higher resistance settings are needed for meters with a higher voltage range, for example, 30kΩ for a 0-30V type.

The output voltage is controlled by IC1, using its pin 5 (non-inverting) and pin 4 (inverting) inputs and pin 11, which is the collector of its internal output transistor.

The emitter of that transistor is internally connected to the cathode of a 6.2V zener diode, which is supplied with current via the 220kΩ resistor to pin 10 and its anode is connected to ground via pin 9.

When the voltage at pin 5 is higher than the voltage at pin 6, the IC sinks current from the base of Q3 via the 4.7kΩ resistor, into pin 11.

This causes Q3 to conduct, delivering current to the base of Q4, thus raising the output voltage. When Q3 switches off, the 47Ω resistor between Q4's base and emitter causes it to switch off as well, lowering the output voltage.

A fraction of the output voltage is fed back to the inverting input at pin 4, via a fixed resistive divider comprising 62kΩ and 22kΩ resistors. The bottom end of this divider goes to the wiper of potentiometer VR2 rather than ground.

Pin 6 of IC1 provides a nominal 7.15V reference. This is used to bias both the inverting and non-inverting input pins. The non-inverting pin bias is fixed at around 5.28V due to another 62kΩ/22kΩ divider, from the reference output to pin 5 and then to ground. The voltage at the wiper of VR2 can be varied from the 7.15V reference, down to 0V.

Consider the case when the wiper of VR2 is at the 7.15V end, ie, fully anti-clockwise. We know that the non-inverting input is held at 5.28V. To get the same 5.28V at the inverting input (pin 4), the output would need to be 0V. As VR2 is rotated clockwise and its wiper voltage decreases, the output voltage must increase in order to keep the two input voltages equal.

Hence, VR2 can be used to vary the output voltage all the way down to 0V and up to 20.16V (5.28V × [62kΩ + 22kΩ] ÷ 22kΩ).

The 470pF capacitor between pins 4 and 13 reduces the bandwidth of the feedback loop, by feeding back fast changes in the output voltage directly to the inverting input pin.

Since pin 13 is internally connected to the base drive for the output stage, 8.2V zener diode ZD1 limits the drive to that output stage, preventing saturation and keeping the IC operating in linear mode. Stability is also im-

proved by the 1.8kΩ resistor across the output terminals, which provides a minimum load.

The current limit is set using potentiometer VR1 and controlled by PNP transistor Q2. With no current drawn from the output, the voltage across VR1 and its 220Ω and 100Ω padder resistors will be around 0.7V, ie, the forward voltage of diode D1.

This voltage increases at around 1V/A, due to the 1Ω resistor in series with D2. VR1 controls what fraction of this voltage is applied to the base of Q2.

When this fraction exceeds around 0.6V, Q2 switches on and supplies current to pin 11 of IC1, the same pin that is driving output transistors Q3 and Q4. Since pin 11 can only sink around 2mA, due to the 4.7kΩ series resistor, this has the effect of forcing the output transistors to switch off, reducing the output voltage.

This, in turn, lowers the output current, which reduces the base drive to Q3 and thus the output voltage should stabilise at a level where the output current flow is at a value as determined by the rotation of VR1.

The padder resistors are chosen to give a near-zero output current when VR1 is fully anti-clockwise and the full 2.5A that the supply is capable of when it is fully clockwise.

The same voltage which drives the base of Q2 is also applied to the base of PNP transistor Q1 via a 47Ω resistor. Thus, Q1 will switch on when Q2 does, indicating that current limiting is in effect by lighting LED2.

Construction

I have produced a single-sided PCB design for this power supply; a PDF pattern can be downloaded from the SILICON CHIP website.

The following components are mounted off-board: T1, VR1, VR2, LED1, LED2, Q4 and the voltmeter and ammeter. A wiring diagram is supplied with the PCB pattern, to show how these are connected.

Q4, the main transistor, is in a TO-3 package and should be mounted on a substantial heatsink as it can dissipate up to 75W or so. Q3, its driver transistor, should have a small flag heatsink fitted.

While this circuit is based on an old design, the parts are still available and the LM723C and 2N3055 are still in production. The other parts are either generic or have been replaced with more modern versions.

Gianni Pallotti,
North Rocks, NSW. ($75)

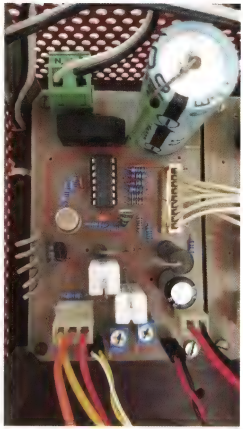

Most of the components on the prototype PCB have been mounted vertically to keep it compact. Note the heatsink on Q3.

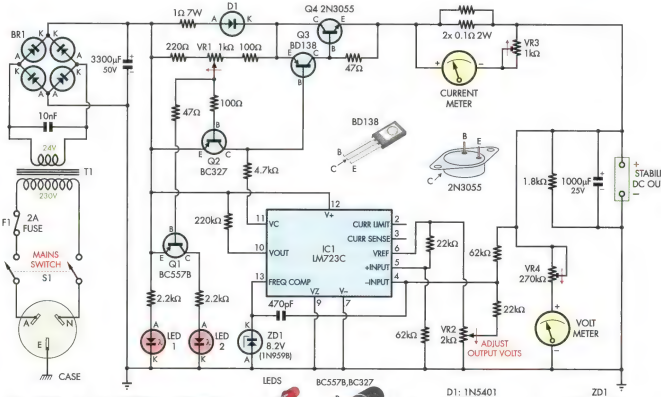

SC 20V/2.5A POWER SUPPLY

Personal Speedometer for jogging

I built this device to keep track of how far and how fast I go when jogging. I know there are plenty of smartphone apps to track this type of activity but since jogging is a bit of an "escape" for me, I don't like to carry my phone while I'm doing it.

Also, even if I did bring my phone, I wouldn't be able to choose between the dozens of available apps. Most of these apps seem to also require an internet connection while you're jogging, making it a bit prohibitive to use. This unit also costs a lot less to build than buying a typical smartphone, so I don't have to worry about breaking or losing it.

It uses a GPS receiver to track your jogging and has an OLED display to show the results. I purchased the major parts from AliExpress for around $20.

Because your route might have areas where you backtrack, run laps or repeat sections, I have included some buttons to give the unit waypoints.

Basically, after you run each straight section and are about to make a turn, you press the "P" button to indicate to the unit that you have just completed a section.

This way, it will correctly track the distance you jog even if you loop back around.

This also serves as a kind of "lap" button, ie, it will show the distance that you've travelled since you last pressed the P button, as well as the total distance travelled in this session so far.

You can press the "Q" button when you've finished jogging and it will show you the total distance you've travelled, how long it took and your average speed in km/h.

You can do this at any time after you have finished jogging since the data is stored in EEPROM and only cleared when you press the P button to start the next session.

As shown in the circuit diagram, there isn't much hardware required; you can build it using an Arduino Uno, a Nano or a bare ATmega328P IC.

If using the bare IC, you will need to load it with the minimal Arduino bootloader which can operate without a crystal.

Details on how to do this are shown at: www.arduino.cc/en/Tutorial/ArduinoToBreadboard

The OLED display is controlled via an I²C serial bus so it's wired up to the SDA and SCL control lines at pins 27 and 28 of IC1 respectively. NMEA serial data from the GPS receiver is fed to pin 15 of IC1 (digital input PB1).

The battery voltage is reduced by a 330kΩ/390kΩ resistive divider and fed to analog input ADC0 at pin 23 so that the micro can monitor the battery voltage.

The GPS receiver, micro and OLED are all powered from a 3.3V rail produced by an HT7333-1 250mA low-dropout (LDO) regulator with power from a single lithium-ion or lithium-polymer cell.

These have a nominal voltage of around 3.7V but typically vary from 4.1-4.2V fully charged, down to around 3.0-3.3V when fully discharged. There is no cell reverse polarity protection so ensure it is wired correctly!

I built the unit on a small piece of double-sided prototyping matrix board, with the Arduino Nano, OLED display and buttons mounted on one side and the battery and other components soldered to the opposite side.

The GPS receiver was connected by flying leads (see photograph to the right). Make the connections using point-to-point wiring, as shown in the circuit diagram.

Having built the unit, take it outdoors (so it has a clear path to the GPS satellites) and power it up. The 1pps LED on the GPS receiver should start to flash and then you will get a display on the OLED screen indicating your current latitude, longitude, the number of satellites in view, current time in UTC and your current speed.

Press the P button and a new line will appear below the others, indicating the distance that you've travelled

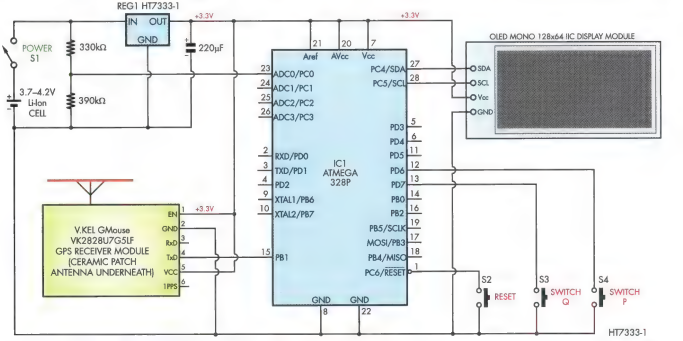

PERSONAL SPEEDOMETER WITH BATTERY INDICATOR

in km, for the current segment and in total (initially both zero), the number of segments you have traversed (also initially zero) and the number of seconds elapsed.

Press the Q switch and check that the summary appears. You can then press the P button to start a new session and take the unit out for a test jog!

The software (including header file) will be available from the SILICON CHIP website and is labelled "ARDUINO_GPS_OLED_speedo_meter.ino".

Bera Somnath,
Vindhyanagar, India. ($70)

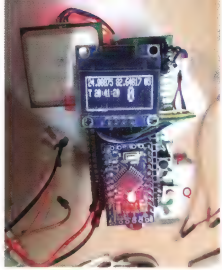

Sunset Switch to discourage possums

We had trouble with possums in a tree outside our back door. Every morning, the ground was covered in droppings, leaves etc. We accidentally left on our outdoor spotlights one night and noticed that there was a significant reduction in possum-related mess.

Whilst it is not difficult to turn on the spotlights as it turns dark and turn them off again in the morning, I needed a "sunset" switch so I wouldn't forget.

The circuit I devised is based on a light-dependent resistor (LDR). When it's light, the LDR's resistance is low, so the voltage at pin 2 of comparator IC1 (actually an LM358 op amp) is low. The non-inverting input, pin 3, is supplied with a reference voltage that's derived from the 9V supply and adjusted using trimpot VR1.

As darkness falls, the LDR resistance increases and the voltage at pin 2 rises. Eventually, it rises above that of pin 3 and so output pin 1 goes low, switching off transistor Q1 and allowing current to flow from the 9V supply through the two 1kΩ resistors to the base of Q2, which then switches on.

This energises the coil of relay RLY1, closing the contacts and applying 230VAC to the spotlight(s) plugged into the 3-pin mains socket.

The 11kΩ resistor between pins 1 and 3 of IC1 provides hysteresis, which prevents the relay from chattering (switching on and off rapidly) at dawn and dusk, when a cloud passes overhead, etc.

If using a different type of relay for RLY1, ensure that its "must operate" voltage is below 9V or it may not work reliably. Most 12V DC coil relays will switch on at 9V but a relay with a 9V DC coil would certainly work if you can find one with appropriate contact ratings.

Power for the circuit is derived from the same mains supply that is fed through to the spotlights, using a small 9V centre-tapped transformer with a bridge rectifier (BR1) at its output that feeds a 470µF filter capacitor and 7809 linear regulator (REG1).

Diode D1 quenches the relay coil back-EMF at switch-off while a neon and series resistor across the switched mains supply indicate that power is present.

I fitted a 2A fuse in the Active line to protect the circuit and this provides more than enough current to operate a few 10W LED floodlights but you would need a higher-current fuse if you want to power halogen lamps or similar.

I aimed one spotlight directly at the tree trunk and another into the foliage. You may need to experiment to get the best result.

This circuit could be used for many other purposes that need to sense light levels and switch on or off in dark or light conditions.

Jon Kirkwood,
Castlecrag, NSW. ($40)

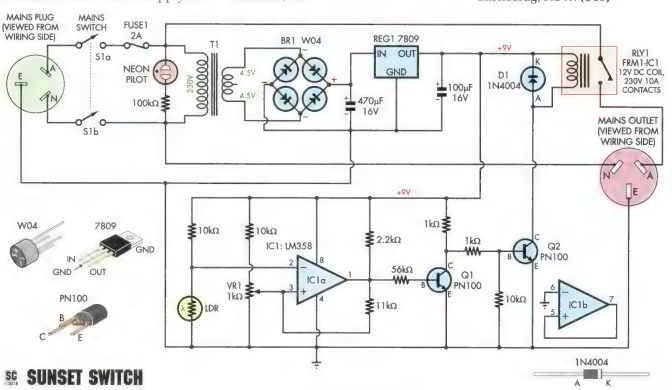

SC SUNSET SWITCH

Adjustable low-pass filter

An adjustable active low-pass filter can be useful in a number of audio applications.

For example, it can be used to clean up and reduce the distortion of a sine-wave from a direct digital synthesiser (DDS). Or it can be used to limit the bandwidth of a noise source. This one can be adjusted to have a -3dB point between about 600Hz and 100kHz.

RC (resistor-capacitor) filters are first-order filters and so have the slowest roll-off (6dB/octave). They also have desirable characteristics, like a lack of ripple in the passband without tuning, and very low noise and distortion when the right components are used. Hence, this filter is based on passive RC filters but does offer some active buffering and amplification if required.

The input signal is AC-coupled with a 10µF non-polarised capacitor, or DC coupled if S1 is closed, shorting out that capacitor. It is then fed to potentiometer VR1 which acts as a level control, with diodes D1 and D2 clipping the signal so it does not exceed the supply rails and the 200Ω resistor limits the current through those diodes.

The level-adjusted signal is then fed to low-noise buffer op amp IC1a. It operates with unity gain if switch S18 is open or two times gain if the switch is closed.

Its output is then fed to the first passive low-pass filter stage, which uses a fixed 1.6kΩ resistor and a combination of eight capacitors from 100pF to 68nF, selected by DIP switch bank S2-S9.

This gives a selectable -3dB point of between 616Hz (all eight switches closed) and 1MHz (only S2 closed).

The -3dB point can be calculated by adding up the capacitors which are switched into the circuit by S2-S8 and then feeding this into the following formula: f(Hz) = 1 ÷ (2π × 1600Ω × C) where C is the sum of the capacitor values in farads.

The values with one switch closed at a time are 1.5kHz, 4.5kHz, 12kHz, 30kHz, 83kHz, 200kHz, 660kHz and 1MHz. The capacitor values were chosen to give a good range of intermediate frequencies between these values and below 1.5kHz, when more than one switch is closed.

Having passed through the first RC filter, the signal is then buffered by another low-noise op amp, IC1b, again with the option of two times gain, using switch S19.

The signal is then fed to another identical filtering and buffering/amplification arrangement, this time using DIP switch bank S10-S17 and op amp IC2a. DIP switches S10-S17 can be left open if a single-order filter is desired; in this case, IC1b will simply act as a gain stage/buffer (depending on the setting of S19).

If the two DIP switch banks are configured identically, the -3dB point will be reduced by 36% compared to a single filter.

For example, if S2-S8 are open and S9 is closed, the first stage will have a -3dB point of 1463Hz (1 ÷ [2π × 1.6kΩ × 68nF]). If S10-S16 are also open and S17 also closed, the overall -3dB

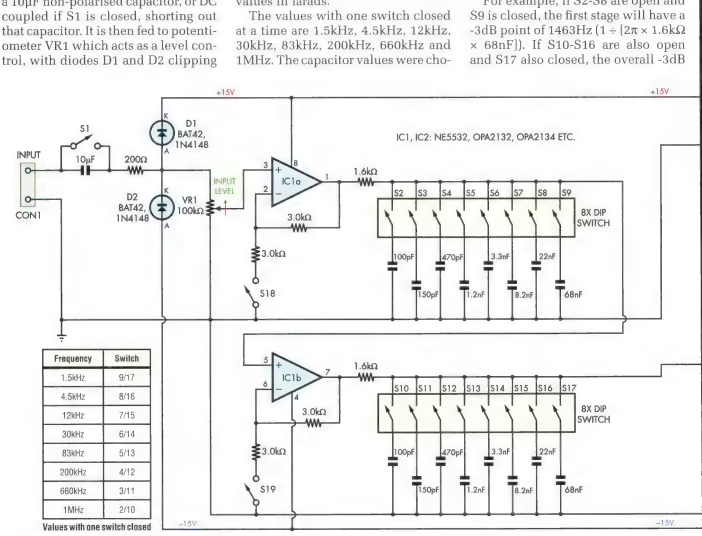

Frequency	Switch
1.5kHz	9/17
4.5kHz	8/16
12kHz	7/15
30kHz	6/14
83kHz	5/13
200kHz	4/12
660kHz	3/11
1MHz	2/10

Values with one switch closed

AUDIO LOW-PASS FILTER

Circuit Ideas Wanted

Got an interesting original circuit that you have cleverly devised? We will pay good money to feature it in Circuit Notebook. We can pay you by electronic funds transfer, cheque or direct to your PayPal account. Or you can use the funds to purchase anything from the Silicon Chip on-line shop, including PCBs and components, back issues, subscriptions or whatever. Email your circuit and descriptive text to editor@siliconchip.com.au

point of the circuit will then be 936Hz (1463Hz × 64%).

The roll-off above the -3dB point is 6dB/octave for a single stage (first-order) filter and 12dB/octave for a second-order filter.

It would be possible to configure the two DIP switch banks differently and this would give you a dual-slope response, with around -6dB/octave between the two corner frequencies and then -12dB/octave above the higher of the two.

The output from both filter banks is fed to CON2 via a 100Ω resistor (OUT1), to isolate any output capacitance from op amp IC2a and prevent oscillation. Op amp IC2b inverts the signal from IC2a and this is fed to a separate, complementary output (OUT2), again via a 100Ω resistor.

Depending on the positions of switches S18-S20, the maximum possible gain is eight times. The output level can be fine-tuned using VR1. For the best performance, set VR1 at the highest level possible and enable the minimum number of gain stages to obtain the required output amplitude.

The circuit requires split rails to function and these are provided from a 15VAC plugpack by a half-wave voltage doubling rectifier, two filter capacitors and 7815/7915 linear regulators.

Petre Petrov,
Sofia, Bulgaria. ($50)

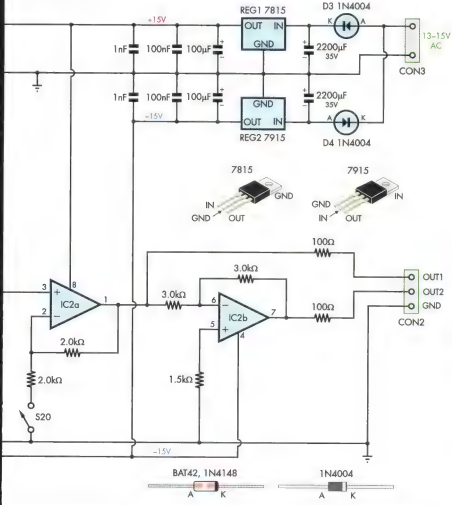

DIY SPEAKER KITS

the loud speaker kit.com

Australia's #1 source for DIY audio kits & components

VISIT OUR ONLINE STORE

www.theloudspeakerkit.com

Ph: (02) 8120 8010

35MHz-4.4GHz digitally controlled oscillator

This programmable frequency module is based on the ADF4351 PLL (Phase-Locked Loop) IC and it can produce a sinewave from 35MHz to 4.4GHz, with crystal accuracy. It can even be used as a sweep generator and costs less than $30.

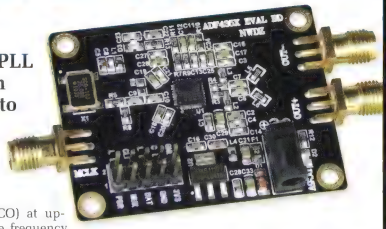

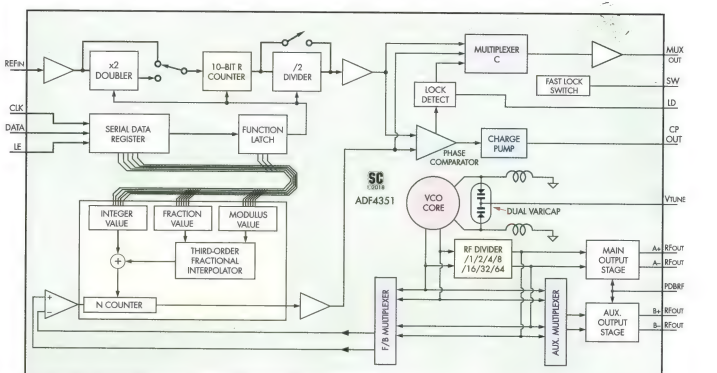

Fig.2: block diagram of the ADF4351 wideband synthesiser IC. The integrated voltage-controlled oscillator has an output frequency range of 2.2 to 4.4GHz, which, when combined with the RF divider, provides the ~35MHz to 4.4GHz range. The fractional-N PLL controls the frequency from its three registers via the equation: $F_{OUT} = F_{FB} \times (INT + FRAC \div MOD)$.

Unfortunately, this reduces the output frequency adjustment resolution. However, this can be overcome by adopting what's referred to as a "dual modulus prescaler".

This is essentially a prescaler with a division ratio that can be switched from one value (say P) to another (like P+1) by an external control signal.

We don't have space here to fully explain the operation of modern (and quite elaborate) PLLs but the prior description should be enough to understand how the ADF4351 works.

Inside the ADF4351

The block diagram of the ADF4351 IC (Fig.2) is somewhat more complex than the basic PLL shown in Fig.1. The VCO part of the device is labelled "VCO CORE" and shaded pink.

There are actually four VCOs inside the core, each used to generate a different frequency range. They are all tuned by the dual varicap diode shown to its right, using a tuning voltage fed in via the V_{TUNE} pin.

Above the VCO core, you can see the phase comparator and charge pump, both blue. The charge pump output goes to the CP_{OUT} pin, so that an external low-pass filter can be used to smooth the pulsating output of the charge pump before it is fed back into the ADF4351 via the V_{TUNE} pin.

The differential outputs from the bottom of the VCO core go to three different destinations. One of these is to the yellow "RF DIVIDER" block to its right. This programmable frequency divider can divide the VCO output frequency by 1 (ie, no division), 2, 4, 8, 16, 32 or 64.

This lets the chip generate low output frequencies while the VCO core is operating at much higher frequencies (2.2-4.4GHz).

The outputs from the RF divider are fed directly to the chip's main RF output stage, which drives the A+ out and A- out pins. The RF divider outputs also go to the inputs of two different multiplexers (digital selector switches), shown in mauve.

The auxiliary multiplexer on the right switches between the direct output lines from the VCO core and the outputs from the RF divider and so determines which is fed to the auxiliary RF output stage and then to the B+ and B- output pins. The PDBRF pin allows both RF output stages to be disabled when they are not needed, to save power.

The feedback (F/B) multiplexer at left determines which of the same two signal pairs go to the feedback divider, in the yellow box. It's also rather more complex than the simple feedback divider shown in Fig.1. That's because the ADF4351 offers the ability to implement either an integer-N or a fractional-N PLL, as required.

So the feedback divider needs three registers which hold the integer division value, the fractional division value and the modulus value, plus control circuitry labelled "third-order fractional interpolator".

This circuitry effectively allows the feedback frequency to be divided by a rational number (fraction). The output of this divider is then fed, via a buffer, to the phase comparator.

The circuitry shown in the upper-left corner of Fig.2 takes the input from the external reference oscillator (fed into the REF_{IN} pin) and processes it before feeding it to the other phase comparator input.

As mentioned earlier, one of the refinements to earlier PLLs was to add a reference signal frequency divider, so that high-frequency reference oscillators could be used; hence the 10-bit R counter.

But the ADF4351 also provides a frequency doubler and an additional divide-by-two stage for the reference input, both of which can be switched in or out under software control. This gives the chip a great deal of flexibility.

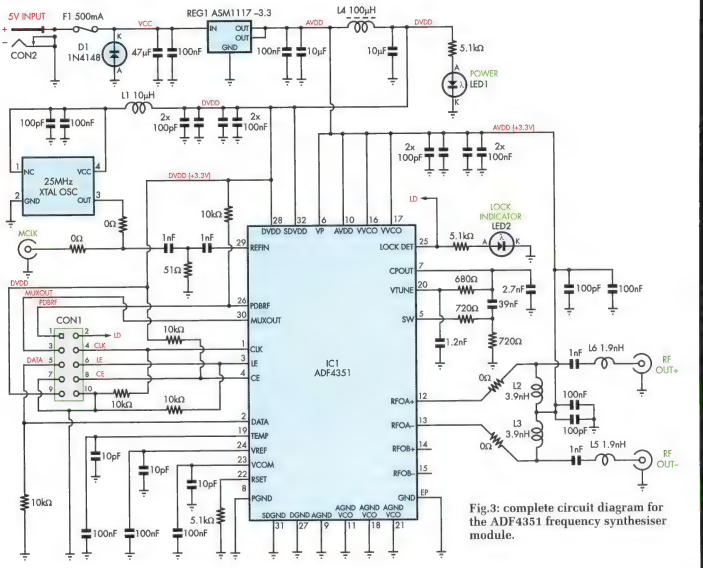

Fig.3: complete circuit diagram for the ADF4351 frequency synthesiser module.

The whole chip is controlled by means of a simple 3-wire serial peripheral interface (SPI), shown at centre left of Fig.2.

Serial data from the PC or microcontroller is fed in via the DATA pin, clocked into the serial data register and function latch via clock pulses fed to the CLK pin, and then latched into the various control registers by feeding in a pulse via the LE (latch enable) pin.

All functions of the ADF4351 chip are configured using six 32-bit control words, sent over this serial bus.

Multiplexer C and the other blocks at the upper right of Fig.2 allow external monitoring of the ADF4351's status.

The "LOCK DETECT" block monitors the phase comparator and provides a high logic output on the LD pin when the PLL is locked. Multiplexer C allows either of the two phase comparator inputs or this lock status to be fed to MUX_{OUT} pin.

The fast lock switch provides a signal which can be fed into the external low pass filter (between the CP_{OUT} and V_{TUNE} pins) when in "fast lock" mode. So that covers the operation of the IC itself.

The synthesiser module

The full circuit of the module is shown in Fig.3 and most of the real work is done by IC1.

All of the programming and status monitoring signals to and from the module are available at CON1. This includes the DATA, CLK and LE lines (ie, the serial bus) and also the CE (chip enable), LD (lock detect), MUX_{OUT} and PDBRF (power down RF buffer) lines.

The reference signal is provided by a 25MHz crystal oscillator (XO), shown at upper left, with its output fed to the REF_{IN} pin of IC1 via a loading/coupling circuit comprising two 1nF capacitors and a 51Ω resistor.

Note that there is also provision for feeding in a different reference signal, via the SMA socket labelled MCLK. In order to do this, you'd need to remove the 0Ω resistor connected to pin 3 of the onboard XO. If you are using the onboard XO, the MCLK socket can be used to monitor its output via a scope or frequency counter.

The resistors and capacitors connecting the CP_{OUT} and SW pins of IC1 (pins 7 and 5) to the V_{TUNE} pin (pin 20) form the low-pass loop feedback filter.

The RF output signals from the RFOA+ and RFOA- pins (12 and 13) are taken to the RF_{OUT+} and RF_{OUT-} SMA sockets via matching/filtering circuits using L2, L3, L5 and L6, plus two 1nF capacitors.

Notice that the output pins are fed with the +3.3V supply voltage via L2 and L3. In this module, the auxiliary RF outputs RF_{OB+} and RF_{OB-} (pins 14 and 15) are not wired up.

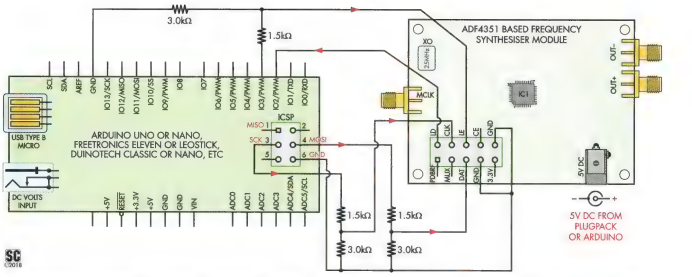

Fig.4: when connecting the ADF4351 synthesiser module to an Arduino-based device, a few extra resistors are needed. These resistors form a voltage divider, as the module can only handle 3.3V signals, while the Arduino's outputs have a swing of 5V. Note the changes needed if using a V2 module at the end of this article.

The whole module operates from a 3.3V supply, derived from the 5V input at CON2 via REG1, an ASM1117 low-dropout regulator. This AV_{DD} rail powers all of the analog/RF circuitry directly.

The digital supply rail, DV_{DD}, is derived from AV_{DD} using LC filters comprising inductors L4 and L1 and a number of bypass capacitors.

There are two indicator LEDs. LED1 is connected between the DV_{DD} line and ground and indicates when the module has power while LED2 is connected to the LD (lock detect) pin of IC1 (pin 25) and indicates when the PLL is in lock.

All the remaining components are for bypassing and stability, apart from fuse F1 and diode D1, which prevent damage in the event that the 5V power source is connected with reversed polarity.

Controlling it with an Arduino

I initially hooked the module up to an Arduino Uno using the simple circuit shown in Fig.4. The three main control lines MOSI, SCK and LE are not taken directly to the DAT, CLK and LE pins of the module but instead via 1.5kΩ/3kΩ voltage dividers.

This is because the inputs of the ADF4351 can only cope with 3.3V signals, whereas the Arduino outputs have a 5V output swing.

The LD signal fed back from the module to the Arduino's D2 pin does not need a divider because it's going the other way and the Arduino inputs function well with a signal having a swing of 3.3V.

Note also that Fig.4 indicates that the 5V supply for the module can come from either a plugpack or from the 5V output of the Arduino. I adapted an Arduino sketch I found on the internet, written by French radio amateur Alain Fort F1CJN (siliconchip.com.au/link/aaje).

Mr Fort's sketch was written for an Arduino with an LCD button shield but I decided to adapt it so that it would work with the simple configuration shown in Fig.4, relying on the Arduino IDE's Serial Monitor to send commands to the ADF4351 and to indicate the PLL's output frequency and whether it was locked or not.

I also connected one of the PLL module's RF outputs to my frequency counter, via a prescaler, so I could monitor it.

The results were quite impressive. I could type in any frequency between 35MHz and 4.4GHz, with a resolution of 0.01MHz (10kHz) and the module's output would lock to that frequency in the blink of an eye.

I also monitored the current drawn by the module and found that it varied between 110mA and 145mA, depending on the output frequency.

I also checked the accuracy of the module's 25MHz on-board reference XO and found it to be 25.0000734MHz or only 73.4Hz high. Since this equates to an error of just +2.936ppm, it seems quite accurate.

So that's one easy way to get the ADF4351 module going with an Arduino. The sketch ("ADF4351_and_Arduino_SC_version.ino") is available for download from the SILICON CHIP website.

Driving it from a Micromite

I also hooked the module up to a Micromite LCD BackPack combination and wrote some code so that it could be controlled via the LCD touchscreen.

The circuit is shown in Fig.5 and it's about as simple as you can get. In this

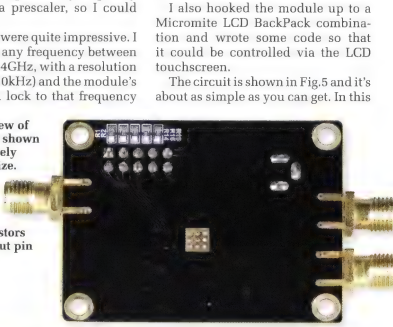

The bottom view of this module is shown at approximately twice actual size. The bottom of the board is populated by five 10kΩ pulldown resistors for the breakout pin connections.

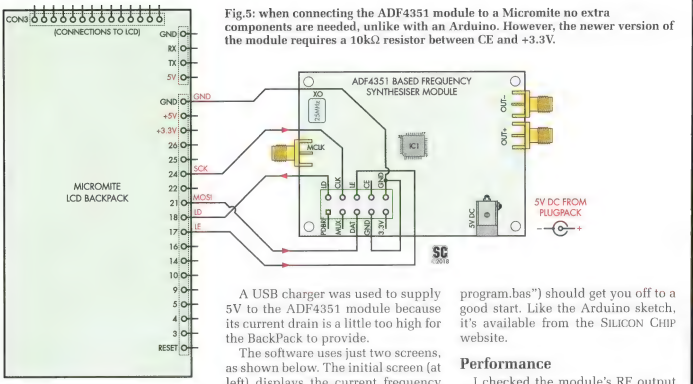

Fig.5: when connecting the ADF4351 module to a Micromite no extra components are needed, unlike with an Arduino. However, the newer version of the module requires a 10kΩ resistor between CE and +3.3V.

case, no resistive dividers are needed on the SCK, MOSI and LE lines because the Micromite's logic pins have a swing of 3.3V.

I used a "software" SPI port rather than the hardware one used by the Micromite to communicate with the LCD and touchscreen, to prevent possible interaction.

The embedded C code (CFUNCTION) needed to provide this added port is included in the MMBasic program I wrote for this approach. Software SPI port performance is limited but that isn't a problem as the amount of data to transfer is small.

A USB charger was used to supply 5V to the ADF4351 module because its current drain is a little too high for the BackPack to provide.

The software uses just two screens, as shown below. The initial screen (at left) displays the current frequency and gives you the option of touching the button at the bottom if you want to change it.

You will then get the second screen, which allows you to key in a new frequency, displayed below the current frequency.

When you're happy with the new figure, simply touch the OK button and the module jumps to the new frequency. The program returns to the main screen, displaying the new frequency.

So for those who would like to team up the module with a Micromite, this program ("Simple ADF4351 driver program.bas") should get you off to a good start. Like the Arduino sketch, it's available from the SILICON CHIP website.

Performance

I checked the module's RF output performance at quite a few different frequencies, using my Signal Hound USB-SA44B spectrum analyser controlled by Signal Hound's "Spike" software.

The results were quite impressive, as you can see from the two spectrum plots. One plot shows the output at 275MHz, with the only significant spurs visible being at ±50MHz with an amplitude of -57dBm.

The other plot shows the output at 4.200GHz, with two spurs again visible but this time both on the low side: one at 4.150GHz (far left) with an amplitude of about -53dBm and the

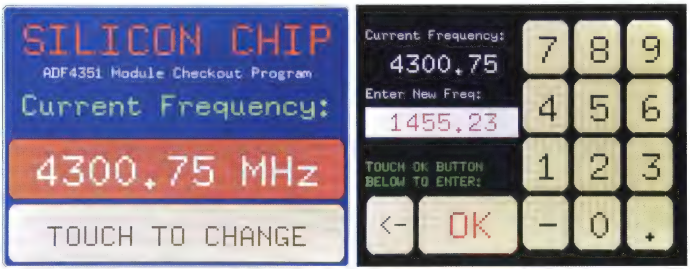

The sample program running on a Micromite LCD BackPack. These are the only two screens the software uses, one to enter a specific frequency for the module to output and another to display the current frequency.

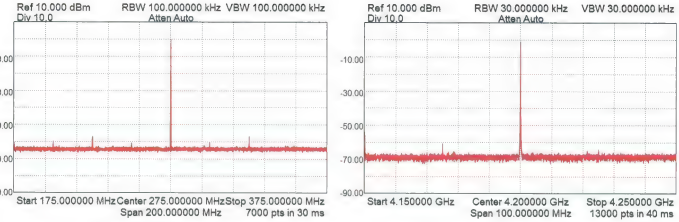

Spectrum analysis of the ADF4351 module's output performance at 275MHz (left) and 4.2GHz (right). The RF output performance over the full range was good, with only a few visible spurs outside the programmed frequency. These normally correspond to beat frequencies or integer-multiples of the reference and oscillator frequency.

other at 4.175GHz with an amplitude of -61dBm.

In both cases, the amplitude of the main output carrier is very close to 0dBm. This turned out to be the case over most of the range, in fact.

The only region where the carrier level did drop (to around -20dBm) was in the vicinity of 2.45GHz – perhaps by design, to minimise interference with WiFi and Bluetooth systems.

Overall, the ADF4351 frequency synthesiser module is very impressive, especially when you consider its frequency range and price.

It could even be used to make your own VHF/UHF signal and sweep generator, teamed up with a Micromite and a 4GHz digital attenuator module that we will describe in next month's issue.

A new version of the ADF4351 synthesiser module

Just recently we received a second ADF4351 Synthesiser module and discovered that it was a "V2" module which had been changed in a number of ways compared with the first version.

These changes will be critical to successfully connect the module to a micro, so here are the main details listed below:

1. Many of the connections to the 10-way pin header (CON1) have changed, as shown in Fig.6.
2. There is now no on-board pullup resistor connecting IC1's CE pin to the +3.3V (DV_{DD}) line, nor are there pulldown resistors connected between the CLK, DATA and LE pins and ground.

To ensure normal operation of the module with either an Arduino or a Micromite, an external 10kΩ resistor must be connected between the CE and +3.3V pins of CON1.

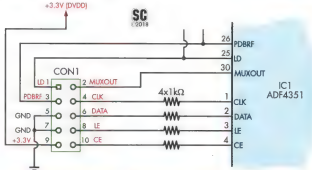

Fig.6: CON1 has been changed completely on the newer version of the ADF4351 module. Every signal, except for CLK, is connected to a different pin location.

To ensure maximum stability, it's a good idea to also connect an external 10kΩ resistors between the LE pin and ground.

Once the above changes are made, version 2 of the module performs just as well as the earlier version.

Useful links

The module from AliExpress: www.aliexpress.com/item//32848807357.html

The module from eBay: www.ebay.com.au/itm/142521016834

ADF4351 data sheet: siliconchip.com.au/link/aajc

Fundamentals of PLLs: siliconchip.com.au/link/aajd SC

PRODUCT SHOWCASE

Entry-level R&S Spectrum Analyser with advanced-level features

The latest Rohde & Schwarz spectrum analyser is the first analyser on the market to integrate the three most-commonly-used instruments on an RF engineer's workbench, in one budget-friendly instrument.

It combines a 5kHz to 1GHz Spectrum Analyser (with instant option up to 3GHz), a Network Analyser and an inbuilt Signal Generator.

The R&S FPC1500 is the world's first spectrum analyser to include a one-port vector network analyser with internal VSWR bridge, an independent CW signal generator and a tracking generator.

It is ideal for education, for applications in service and repair shops and for advanced hobbyists.

Despite its budget-friendly concept, the R&S FPC1500 is designed to the same quality standards as high-end Rohde & Schwarz instruments, providing solid RF performance and a comprehensive, future-ready feature set.

Spectrum analyser

For applications requiring a high sensitivity to characterise extremely weak signals, the R&S FPC1500 offers a low noise floor level of –150dBm (typ.), which can be further extended to –165dBm (typ.) through an optional, keycode-activated preamplifier. Its high maximum input power allows users to measure RF signals up to +30dBm (1W).

This combination of high sensitivity and high input power level gives the R&S FPC1500 an exceptionally wide measurement dynamic range.

Network analyser

Thanks to the internal VSWR bridge, the R&S FPC1500 can perform reflection measurements. This allows users to measure impedance on antennas or RF circuits with the Smith chart display or use distance-to-fault measurements to detect faulty locations on a long RF cable.

Signal generator

The tracking generator integrated into the R&S FPC1500 enables scalar transmission measurements on passive and active RF components that do not produce their own RF signal, eg, amplifiers, filters and even RF cables.

Contact:
Rohde & Schwarz (Aust) Pty Ltd
Unit 2, 75 Epping Rd, Lane Cove NSW 2113
Tel: (02) 8874 5188
Web: www.rohde-schwarz.com.au

COMING THIS MONTH:

18, 19 & 20TH MAY

SEA WORLD GOLD COAST QUEENSLAND

The 2018 WIA RADIO & ELECTRONICS CONVENTION – "BEYOND 2020"

The WIA Annual General Meeting (AGM) and Technical Forum will be held over the weekend of 18th, 19th and 20th May 2018 at SeaWorld on the Gold Coast (Queensland). This year's event is being organised by the Gold Coast Amateur Radio Club (GCARC) with most of the weekend's activities taking place at the Sea World Resort.

As has become the tradition, there will be a Friday night dinner which will lead into a full day convention on Saturday, with a field day on the Sunday plus many unique tours. Registration and detailed information is available at www.wia.org.au/convention or by emailing wiaagm@wia.org.au.

CeBIT IN MAY, TOO

Immediately prior to the WIA Convention, CeBIT Australia, the largest and longest running business technology conference in the Asia Pacific, will take place from 15-17 May 2018, at the International Convention Centre, Darling Harbour, Sydney.

This year's CeBIT is themed "The Future of Business Technology" and the FutureTech Stage will feature a host of the world's most renowned industry experts on matters relating to the Internet of Things (IoT), FinTech, Artificial Intelligence (AI) and Machine Learning.

Contact:
CeBIT
Registrations: www.cebit.com.au

Jaycar has Wireless Qi Charging

Got an iPhone®8, 8 Plus, iPhone X, Samsung Galaxy Note 8 / S8 / S8 Plus, S7 / S7 Edge or other Qi-enabled device?

Jaycar stores now have available the new MB-3667 Wireless Charger – it supports fast (10W) and standard (5W) wireless charging.

Retail price is $39.95

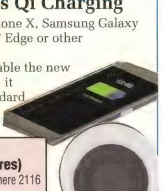

Contact:
Jaycar Electronics (all stores)
Head Office: 320 Victoria Rd, Rydalmere 2116
Tel: (02) 8832 3100
Web: www.jaycar.com.au

SEE HOW TO USE IT IN SILICON CHIP JAN 2016 (or at siliconchip.com.au)

THIS CHART will become as indispensable as your multimeter!

- Huge A2 size (594 x 420mm)
- Printed on 200gsm photo paper
- Draw on with whiteboard markers (remove with damp cloth)
- Available flat or folded

SILICON CHIP .COM.AU

REACTANCE - INDUCTANCE - CAPACITANCE - FREQUENCY READY RECKONER

How good are you at remembering formulas? If you don't use them every day, you're going to forget them!

Things like inductive and capacitive reactance? Series and parallel L/C frequencies? High and low-pass filter frequencies?

This incredibly useful reactance, inductance, capacitance and frequency ready reckoner chart means you don't have to remember those formulas – simply project along the appropriate line until you come to the value required, then read off the answer on the next axis!

Here at SILICON CHIP, we find this the most incredibly useful chart ever – we use it all the time when designing or checking circuits.

In fact, it's so useful we decided our readers would love to get one, so we printed a small quantity – just for you!

And here it is: printed a whopping A2 size (that's 420mm wide and 594mm deep) on beautifully white photographic paper, ready to hang in your laboratory or workshop.

If you don't find it as useful as we do, we'll be amazed! In fact, we'll even give you a money-back guarantee if you don't![#]

Order yours today – while stocks last. Your choice of: Supplied fold-free (mailed in a protective mailing tube); or folded to A4 size and sent in the normal post.

But hurry – you won't believe you have done without it!

[#]Must be returned post paid in original (ie, unmarked) condition.

Read the feature in January 2016 SILICON CHIP (or view online) to see just how useful this chart will be in your workshop or lab!

NOW AVAILABLE, DIRECT FROM www.siliconchip.com.au/shop:

Flat – (rolled) and posted in a secure mailing tube $20.00 ea inc GST & P&P*

Folded – and posted in a heavy A4 envelope $10.00 ea inc GST & P&P*

***READERS OUTSIDE AUSTRALIA:** Email us for a price mailed to your country (specify flat or folded).

ORDER YOURS TODAY – LIMITED QUANTITY AVAILABLE

Vintage Radio

By Dr Hugo Holden

The ZENITH Royal 500 "Owl Eye" AM Radio

The Zenith Royal 500 radio appeared in 1955, one year after the Regency TR-1 which was the first commercial transistor radio in 1954. Unlike the Regency TR-1 though, by the time that the Zenith Royal 500 was released, the technology had rapidly progressed into the conventional circuitry we know today as the typical "7 transistor AM radio".

The Regency TR-1 was powered by a 22.5V battery to help overcome the effects of the large base-collector junction capacitances of the very early transistor types and it had a low intermediate frequency (IF) of 262.5kHz to help overcome transistor bandwidth limitations. It also had a single Class-A output stage.

However, the Zenith Royal 500 had more advanced transistors, the conventional 455kHz IF and was powered by 6V from four AA cells. It also had a conventional transformer-coupled Class-B push-pull audio output stage.

The styling of the Royal 500 could be said to be distinctive, with the metallic surrounds for the black tuning and volume controls and the metallic speaker grille, so much so that in later years it became known as the "Owl Eye" radio.

Also of interest was that its case was labelled on the back as "Unbreakable Nylon". That might seem to have been asking for trouble but my sample does appear to have lasted well, with no cracks in the case.

Also on the back and shown in the photo below, the radio is described as "TUBELESS - 7 TRANSISTORS".

Circuit details

The transistors used in the Royal 500are germanium NPN types, as was the case in other very early AM radios, such as the Regency TR-1 (www.siliconchip.com.au/Article/3761, April 2014) and the Sony TR-72 (www.siliconchip.com.au/Article/6938, March 2014).

However, by the early 1960s most manufacturers had changed to germanium PNP types and by the early 1970s there was a general shift to silicon transistors in most new equipment.

As shown in the circuit diagram of Fig.1, while the design of the Royal 500 now looks to be conventional, it represented a very rapid development in solid-state radio technology.

It became the "world standard" for an AM radio, with three IF transformers, a detector diode and a 3-transistor two-transformer audio system with a Class-A driver stage and as already noted, a push-pull output stage.

In one aspect, the circuit was not world standard, in that it has separate oscillator and mixer transistors. Most later radios had a single mixer-oscillator transistor (often referred to as a converter) and saved a transistor by this approach.

Then again, quite a few designs added an audio preamp transistor, so the total transistor count remained the same at seven.

Interestingly, the circuit has an error, because the detector diode X1

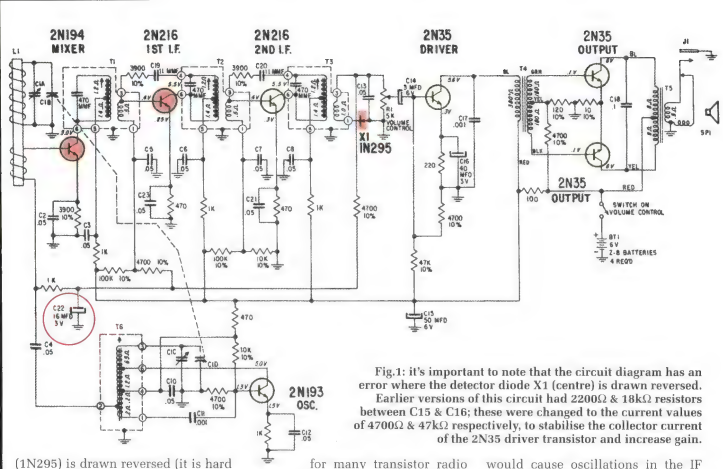

Fig.1: it's important to note that the circuit diagram has an error where the detector diode X1 (centre) is drawn reversed. Earlier versions of this circuit had 2200Ω & 18kΩ resistors between C15 & C16; these were changed to the current values of 4700Ω & 47kΩ respectively, to stabilise the collector current of the 2N35 driver transistor and increase gain.

(1N295) is drawn reversed (it is hard to see and is at the secondary output of the third IF transformer, T3). It is not wired this way in the real radio though, where the diode cathode is returned to ground (negative).

Subsequently there were a number of circuit variations in the Zenith Royal 500, dictated by parts supply, with changes to the AGC design and some versions using PNP transistors too.

The negative-going AGC voltage is developed across C22, a 16µF 3V electrolytic capacitor.

With low signal levels this electrolytic capacitor is subject to a small voltage of the correct polarity from the bias network of the 2N216 and first IF amplifier (the 100kΩ and 4700Ω resistors connected to C22's positive electrode). This also forward-biases the detector diode X1 a little, which helps with detecting low level signals.

However, with most reasonable signal levels from local stations, the AGC voltage on the positive terminal of C22 goes negative with respect to the radio's ground and then C22 is subject to reversed polarity; not good for an electrolytic capacitor.

This is actually a "classic mistake" in the design of AGC circuits in many, but not all, transistor radios.

In fact, this problem appears to have gone unnoticed for over half a century for many transistor radio designs. The practical remedy today is to fit a bipolar electrolytic AGC filter capacitor instead.

Perhaps not surprisingly, this AGC filter capacitor often does go open-circuit in early transistor radios and C22 was open-circuit in my Zenith radio. The unbypassed feedback causes oscillation of the IF stages.

That turned out to be the case when I first switched on my Zenith radio and it was clear from the heterodyne sounds on tuning stations that the IF was oscillating. It would only weakly receive stations and there was a lot of random noise and static too.

Investigation revealed that the mixer transistor had partially failed and the first IF transistor was noisy. The faulty components are indicated in red on the circuit.

All the other electrolytic capacitors, aside from C22, were normal on test for capacitance, ESR and leakage which surprised me, considering their age.

Editor's note: modern electrolytic capacitors will tolerate a small negative bias voltage (<1.5V) long-term without failure.

Neutralisation

Vintage transistors such as the 2N916 have fairly high base to collector feedback capacitance and this would cause oscillations in the IF amplifier stages unless neutralisation was employed.

On this circuit, this is effected by the 11pF and 3900Ω feedback components around the two 2N216 IF transistors. Many European-made PNP transistors for IF work such as the OC45 also required neutralisation when used in 455kHz IF stages in typical AM radio circuits.

When it comes to replacing the 2N916 transistors, you need an NPN germanium type with the same feedback capacitance properties or the IF stage will become unstable and oscillate.

The alternative would be to adjust the feedback components to compensate. I couldn't find any 2N194 or 2N216 transistors, however I found some 2N94s which made suitable replacements.

In radios of the mid to late 1960s, germanium transistors with very low feedback capacitances became available, making the need for IF neutralisation unnecessary. These included PNP transistors such as the AF117 or AF127.

Construction

Two photos in this article show the interior of the Zenith radio. Note that all the transistors are in sockets and

this feature helped with the fault-finding.

While the tuning dial only lists frequencies up to 1400kHz, the radio can still tune above that frequency (to about 1600kHz).

The electrolytic capacitors are housed in white ceramic tubes with their ends sealed with hard resin. There was no evidence of any physical leakage of electrolyte from any of them and as noted, only one was faulty.

One thing to bear in mind when repairing and testing vintage transistor radios is that they have phenolic PCBs, and the adhesion of the copper tracks to the board is nowhere near as good as with modern fibreglass PCBs. So it pays to avoid soldering if possible and when forced to, use a good temperature-controlled iron with the minimal required heat.

Also, in radios where the transistors are soldered on, they should, if possible, have heat-extracting clips placed on their leads while soldering.

Vintage germanium transistors are far more sensitive to heat damage than modern silicon devices. So the advantage of sockets for transistors is that they do not get exposed to heat from soldering but the disadvantage is that the socket connections can become intermittent.

In any case it is better to do exhaustive tests before concluding that any component in the radio needs removal or desoldering. Fortunately, electrolytic capacitors can be checked in circuit with an ESR (Equivalent Series Resistance) meter.

The first step in fault-finding is to ensure the DC operating conditions and voltages are correct on all the transistors. After that, AC tests with a signal generator and the oscilloscope can be helpful, if available.

The manufacturer's general alignment instructions should be followed. However, if the IF transformers have not been touched and the original transistors are present and working OK, it would be better in most cases not to try adjusting the IF transformers.

In particular, it can be very easy to break the slugs as they can be frozen in after 60 years without being touched. So if the slugs can't be easily adjusted, leave them as they are.

If transistors have been replaced in the IF circuits, then the transformer slugs should be re-adjusted. Or if the IF transformers have been tampered with by another party they will most likely require checking and adjustment.

Any test signal generator should be as loosely coupled in as possible or the generator itself can disturb the tuning conditions of the circuit that it is connected to.

The best way is to simply use one or two turns of wire around the ferrite rod (some early transistor radio alignment instructions did specify a magnetic loop to do it and this was a very wise idea).

Editor's note: the AM Transmitter featured in the March 2018 issue can be modified to tune between 440kHz and 600kHz by replacing a single capacitor. It can then be used as an alignment source at 450 or 455kHz. The details are in the article at: www.siliconchip.com.au/Article/11004

Aligning the IF stages

One useful method to adjust the IF transformers is to temporarily deactivate the local oscillator. In this particular radio it just involved unplugging the oscillator transistor and coupling the signal generator in with a 1-turn loop on the ferrite rod, set for a 1kHz modulated 455KHz carrier.

The detected audio can be seen at the volume control with an oscilloscope, heard in the speaker or measured with an AC millivoltmeter.

Coupling a 455kHz signal to the ferrite rod still works without deactivating the local oscillator, but a higher signal level will be required to break through the mixer.

In many cases it is of little help sweeping the IF and plotting the response curve, because the IF coils are all tuned to a maximum peak at the same frequency (typically 455kHz). The point being that the IF amplifier band-pass characteristic is largely

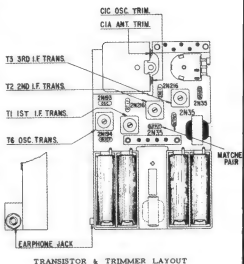

TRANSISTOR & TRIMMER LAYOUT FOR 7XT40 CIRCUIT #2

While obscured in the photos, the Royal 500 does have a separate mono earphone jack (J1 on Fig.1).
Source: *www.transistor-repairs.com/schematics.html*

set by the design of the IF transformers themselves, not by the technician adjusting or "stagger tuning" the IF stages.

Therefore, in my view, an IF sweep generator or "wobbulator" for tuning the IF stages in AM transistor radios has little utility for repairs and adjustments. The opposite is true in correctly adjusting analog television video IF amplifiers though.

Also, generally, it is best to set the IF transformers, or the radio's other adjustments, with a low level modulated RF signal, with the modulation tone just slightly more audible than noise, so that the radio's AGC is just below threshold.

This is because small changes in the observed demodulated audio output voltage amplitude at the detector are suppressed by AGC action which occurs with stronger signals.

Operation	Input signal frequency	Connect inner conductor from oscillator to	Connect outer shield conductor from oscillator to	Set dial at	Trimmers	Purpose
1	455kHz	One turn loosely coupled to wavemagnet	Chassis	600kHz	Adjust T1-T3 for maximum output	For IF alignment
2	1620kHz			Gang wide open	C1C	Set oscillator to dial scale
3	1260kHz			1260kHz	C1A	Align loop antenna
4	535kHz			Gang closed	Adjust slug in T6	Set oscillator to dial scale
5	Repeat steps 2, 3 and 4					

All alignment steps for the Royal 500. Check www.transistor-repairs.com/schematics.html for a great listing of schematic diagrams on Zenith radios.

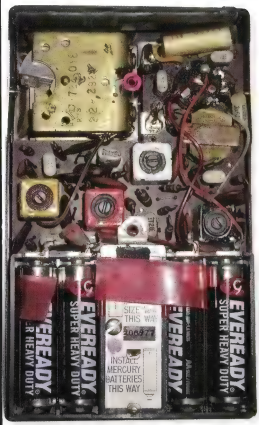

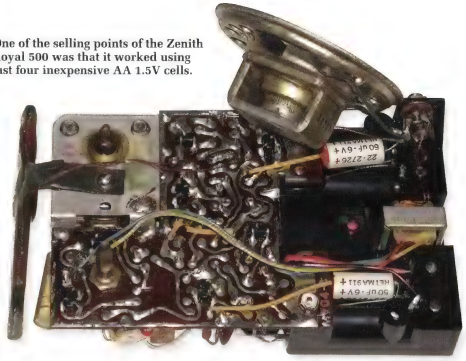

One of the selling points of the Zenith Royal 500 was that it worked using just four inexpensive AA 1.5V cells.

The Royal 500 shown in this article is a model B. It was released in 1956 and used the PCB shown above, instead of being hand-wired. The transistors are all mounted in plug-in sockets, which makes it easy to remove and replace them. While this version of the Royal 500 used NPN transistors, later models made the switch to PNP transistors as they became more common.

Setting the local oscillator

The oscillator coil slug is set to calibrate the pointer with the dial (or set the lowest tuning frequency with the variable capacitor fully meshed) at the low end of the band.

The oscillator trimmer capacitor is then set at the high end of the dial to make sure the tuning range and dial pointer are correct.

The general rule is that the inductances set the low end of the band and the trimmer capacitors on the tuning gang set the high end.

The exception to this rule is when there is an adjustable padder capacitor in series with the oscillator section of the tuning gang. This sets the low end of the band.

Ideally the frequencies that the local oscillator tunes over should be set according to the manufacturer's instructions to ensure the dial scale calibration is as good as possible. This also requires that the IF centre frequency is correctly set.

The antenna circuit is tuned (near the high end of the band) for maximum signal, by adjusting the trimmer capacitor on the relevant section of the tuning gang.

In the case of the Zenith Royal, the manufacturer's instructions specified a test frequency of 1260kHz.

If a radio station sits near to this frequency, and in the absence of good test generators, it is better used as the signal source for this adjustment as there are no generator loading issues to consider. In Sydney, station 2SM at 1269kHz would be ideal.

Often the ferrite rod antenna tuning cannot be easily set for a peak at the low end of the band, because it requires sliding the antenna coil on the ferrite rod to adjust the inductance. But often the coil is held in place with wax and it is better to leave it alone.

Mechanical considerations

On the mechanical side of things, a small amount of lubricant can be added to the moving metal surfaces such as the variable capacitor shaft and bearings.

In this radio there is a ball bearing epicyclic reduction system where the centre tuning knob rotates at a greater rate than the dial pointer shell surrounding it; this aids fine tuning. Cleaning and lubrication of the on-off switch and volume control is often required.

In this radio, there was corrosion and a white oxide on the transistor bodies. This was carefully removed without affecting the labels or logos and the transistors bodies wiped with a small amount of WD40 to help protect them. A coat of clear varnish can be added after that, if required.

Performance

After repairs my sample Zenith 500 radio performed well with good sensitivity and a reasonable tone, despite the small sized speaker. It is as good as any transistor radio made a decade or more later, possibly better, because of the quality of the case and components used.

For example the variable capacitor frame in the radio is solid 1/8-inch thick brass and the speaker has a good-sized magnet although it is compact overall.

For all vintage transistor radios I recommend using carbon zinc cells as their current-sourcing ability is much lower than alkaline cells for short circuit conditions. And if the carbon zinc cells leak fluid, it is much less destructive than that from alkaline cells.

Conclusion

I think the Zenith Royal 500 transistor radio makes a very worthy member of a vintage transistor radio collection. It indicates how quickly transistor radio technology accelerated just two years after the introduction of the Regency TR-1. SC

SILICON CHIP .com.au/shop ONLINESHOP

Looking for a specialised component to build that latest and greatest SILICON CHIP project? Maybe it's the PCB you're after? Or a pre-programmed micro? Or some other hard-to-get "bit"? The chances are they are available direct from the SILICON CHIP Online Shop.

- PCBs are normally IN STOCK and ready for despatch when that month's magazine goes on sale (you don't have to wait for them to be made!).
- Even if stock runs out (eg, for high demand), in most cases there will be no longer than a two-week wait.
- One low p&p charge: $10 per order, irregardless of how many items you order! (AUS only; overseas clients – check the website for a postage quote).
- Our PCBs are beautifully made, very high quality fibreglass boards with pre-tinned tracks, silk screen overlays and where applicable, solder masks.
- Best of all, subscribers receive a 10% discount on purchases! (Excluding subscription renewals and postage costs)

HERE'S HOW TO ORDER:

VISA MasterCard PayPal

All prices are in AUSTRALIAN DOLLARS ($AUD)

- ✔ **INTERNET** (24 hours, 7 days): Log on to our secure website – siliconchip.com.au, click on "SHOP" and follow the links
- ✔ **EMAIL** (24 hours, 7 days): email silicon@siliconchip.com.au – Clearly tell us what you want and include your contact and credit card details
- ✔ **MAIL** (24 hours, 7 days): PO Box 139, Collaroy NSW 2097. Clearly tell us what you want and include your contact and credit card details
- ✔ **PHONE** (9am-5pm AET, Mon-Fri): Call (02) 9939 3295 (INT +612 9939 3295) – have your order ready, including contact and payment details!

YES! You can also order or renew your SILICON CHIP subscription via any of those methods as well!

PRE-PROGRAMMED MICROS

All micros are just $15.00 each + $10 p&p per order#

As a service to readers, the SILICON CHIP Online Shop stocks micros *used in new projects* (from 2012 on) and some selected older projects – pre-programmed and ready to fly!

**some micros from copyrighted and/or contributed projects may not be available.*

PIC12F675-I/P – UHF Remote Switch (Jan09), Ultrasonic Cleaner (Aug10), Ultrasonic Anti-Insulting (Sept10), CricketFrog (Jun12), Do Not Disturb (May13)

PIC12F675-I/SN – IR-to-UHF Converter (Jul13), UHF-to-IR Converter (Jul13), PC Birdies "2 chips – $15 pair" (Aug13), Driveway Monitor Receiver (July15)

PIC16F88-I/P – Hotel Safe Alarm (Jun16), 50A Battery Charger Controller (Nov16), Kelvin the Cricket (Oct17), Triac-based Mains Motor Speed Controller (Mar18), Heater Controller (Apr18)

PIC12F675-I/P – Courtesy LED Light Delay for Cars (Oct14), Fan Speed Controller (Jan18)

PIC16F1455-I/P – Microbridge (Mar17)

PIC16F1507-I/P – Wideband Oxygen Sensor (Jun-Jul12)

PIC16F88-E/P – Hi Energy Ignition (Nov/Dec12), Speedo Corrector (Sept13), Auto Headlight Controller (Oct13), 10A 230V Motor Speed Controller (Feb14), Automotive Sensor Modifier (Dec14)

PIC16F88-I/P – Projector Speed (Apr11), Vox (Jun11), Ultrasonic Water Tank Level (Sep11), Quizzical (Oct11), Ultra LD Preamp (Nov11), 10-Channel Remote Control Receiver (Jun13), Single-Board 10-Channel Remote Control Receiver (Jul13), Nicad/NiMH Burp Charger (Mar14), Remote Mains Timer (Nov14), Driveway Monitor Transmitter (Jul15), Fingerprint Scanner (Nov15), MPPT Lighting Charge Controller (Feb16), 50/60Hz Turntable Driver (May16), Cyclic Pump Timer (Sep16), 60V 40A DC Motor Speed Controller (Jan17), Pool Lap Counter (Mar17), Rapidbrake (Jul17), **Deluxe Frequency Switch (May18)**

PIC16LF88-I/P – Garbage Reminder (Jan13), Belbird (Dec13), GPS Analog Clock Driver (Feb17)

PIC16LF88-I/SO – LED Ladybird (Apr13)

PIC16LF1709-I/SO – Battery Cell Balancer (Mar16)

PIC16F877A-I/P – 6-Digit GPS Clock (May-Jun09), Lab Digital Pot (Jul10), Semtest (Feb-May12)

PIC16F2550-I/SP – Batt Capacity Meter (Jun09), Intelligent Fan Controller (Jul10)

PIC18F4550-I/P – GPS Car Computer (Jan10), GPS Boat Computer (Oct10)

PIC18LF14K22 – Digital Spirit Level (Aug11), G-Force Meter (Nov11)

PIC32MX795F512H-80I/PT – Maximite (Mar11), miniMaximite (Nov11), Colour Maximite (Sept/Oct12), Touchscreen Audio Recorder (Jun/Jul14)

PIC32MX170F256B-50I/SP – Micromite Mk2 (Jan15) – *also included* **FREE** *47µF tantalum capacitor* Micromite LCD BackPack (either version) (Feb16), GPS Boat Computer (Apr16) Micromite Super Clock (Jul16), Touchscreen Voltage/Current Ref (Oct-Dec16) Micromite LCD BackPack V2 (May17), Deluxe eFuse (Aug17) Micromite DDS for IF Alignment (Sept17)

PIC32MX170F256B-I/SP – Low Frequency Distortion Analyser (Apr15)

PIC32MX170F256D-50I/PT – 44-pin Micromite Mk2

PIC32MX250F128B-I/SP – GPS Tracker (Nov13), Micromite ASCII Video Terminal (Jul14)

PIC32MX470F512H-I/PT – Stereo Audio Delay/DSP (Nov13), Stereo Echo/Reverb (Feb 14) Digital Effects Unit (Oct14)

PIC32MX470F512H-120/PT – Micromite PLUS Explore 64 (Aug 16), Micromite Plus LCD BackPack (Nov16)

PIC32MX470F512L-120/PT – Micromite PLUS Explore 100 (Sep-Oct16)

dsPIC33FJ128GP802-I/SP – Digital Audio Signal Generator (Mar-May10), Digital Lighting Controller (Oct-Dec10), SportSync (May11), Digital Audio Delay (Dec11) Quizzical (Oct11), Ultra-LD Preamp (Nov11), LED Musicolor (Nov12)

dsPIC33FJ64MC802-E/P – Induction Motor Speed Controller (revised) (Aug13)

dsPIC33FJ128GP306-I/PT – CLASSIC DAC (Feb-May 13)

When ordering, be sure to select BOTH the micro required AND the project for which it must be programmed.

SPECIALISED COMPONENTS, HARD-TO-GET BITS, ETC

P&P – $10 Per order#

USB PORT PROTECTOR COMPLETE KIT *(MAY 18)*
All parts including the PCB and a length of clear heatshrink tubing **$15.00**

AM RADIO TRANSMITTER *(MAR 18)*
MC1496P double-balanced mixer IC (DIP-14) **$2.50**

VINTAGE TV A/V MODULATOR *(MAR 18)*
MK1374P A/V modulator IC (DIP-14) **$5.00**
SBK-71K coil former pack **(two required)** **$5.00 ea.**

ALTIMETER/WEATHER STATION *(DEC 17)*
Micromite 2.8-inch LCD BackPack kit programmed for the Altimeter project **$65.00**
MS5637 barometric pressure and temperature sensor module (with BMP180, Cat SC4343) **$5.00**
DHT22 temperature and humidity sensor module (Cat SC4150) **$7.50**
Electrow TA500mA Li-ion/LiPo charger board **(optional**, Cat SC4308**)** **$15.00**

PARTS FOR THE 6GHz+ TOUCHSCREEN FREQUENCY COUNTER *(OCT 17)*
Explore 100 kit (Cat SC3834; no LCD included) **$69.90**
one ERA-2SM+ & one ADCH-80A+ (Cat SC1167; two packs required) **$15.00/pk.**

DELUXE EFUSE PARTS *(AUG 17)*
IRF9providers4 P-channel mosfets (Cat SC4318) **$4.00 ea.**
BUK7909-75AIE 75V 120A N-channel SenseFet (Cat SC4317) **$7.50 ea.**
LT1490ACN8 dual op amp (Cat SC4319) **$7.50 ea.**

MICROBRIDGE COMPLETE KIT (CAT SC4264) *(MAY 17)*
PCB plus all on-board parts including programmed microcontroller (SMD ceramics for 10uF) **$20.00**

MICROMITE LCD BACKPACK V2 – COMPLETE KIT (CAT SC4237) *(MAY 17)*
includes PCB, programmed micro, touchscreen LCD, laser-cut UB3 lid, mounting hardware, SMD Mosfets for PWM backlight control and all other on-board parts **$70.00**

POOL LAP COUNTER *(MAR 17)*
two 70mm 7-segment high brightness blue displays + logic-level Mosfet (Cat SC4189) **$17.50**
laser-cut blue tinted UB1 lid, 152 x 90 x 3mm (Cat SC4196) **$7.50**

STATIONMASTER (CAT SC4187) *(MAR 17)*
Hard to get parts: DRV8871 IC, SMD 1µF capacitor and 100kΩ potentiometer with detent **$12.50**

ULTRA LOW VOLTAGE LED FLASHER (CAT SC4125) *(FEB 17)*
kit including PCB and all SMD parts. LDR and blue LED **$12.50**

SC200 AMPLIFIER MODULE (CAT SC4140) *(JAN 17)*
hard-to-get parts: Q8-Q16, D2-D4, 150pF/250V capacitor and five SMD resistors **$35.00**

VARIOUS MODULES & PARTS
ESP-01 WiFi Module (El Cheapo Modules, Part 15, APR18) **$5.00**
WiFi Antennas with U.FL/PX connectors (Water Tank Level Meter with WiFi, FEB18):
5dBi – **$12.50** – 2dBi (omnidirectional) – **$10.00**
NRF24L01+PA+NA transceiver with SNA connector and antenna (El Cheapo 12, JAN18) **$5.00**
WeMos D1 Arduino-compatible boards with WiFi (SPPT17, FEB18):
ThingSpeak data logger – **$10.00** – WiFi Tank Level Meter (ext. antenna socket) – **$15.00**
Geeetech Arduino MP3 shield (Arduino Music Player/Recorder, VS1053, JUL17) **$20.00**
1uF 1% MMT 5mm lead spacing or ceramic capacitor (Water Tank Level Meter, JUN17) **$2.50**
MAX7219 LED controller boards (El Cheapo Modules, Part 7, JUN17):
8x8 red SMD/DIP matrix display – **$5.00** – red 8-digit 7-segment display – **$7.50**
AD9833 DDS module (with gain control) (for Micromite DDS, APR17) **$25.00**
AD9833 DDS module (no gain control) (El Cheapo Modules, Part 6, APR17) **$15.00**
CP2102 USB-UART bridge **$5.00**
microSD card adaptor (El Cheapo Modules; Part 3, JAN17) **$2.50**
DS3231 real-time clock with microSD card slot and screws (El Cheapo, Part 1, OCT16) **$5.00**

MICROMITE PLUS EXPLORE 100 COMPLETE KIT (no LCD panel) *(SEP 16)*
(includes PCB, programmed micro and the hard-to-get bits including female headers, USB and microSD sockets, crystal, etc but does not include the LCD panel) (Cat SC3834) **$69.90**

MICROMITE LCD BACKPACK V1 COMPLETE KIT (CAT SC3321) *(FEB 16)*
includes PCB, micro, 2.8-inch touchscreen and includes UB3 lid (clear, matte black or translucent blue). Also specify what project the micro should be programmed for **$65.00**

THESE ARE ONLY THE MOST RECENT MICROS AND SPECIALISED COMPONENTS. FOR THE FULL LIST, SEE www.siliconchip.com.au/shop

**All items subject to availability. Prices valid for month of magazine issue only. All prices in Australian dollars and include GST where applicable. # P&P prices are within Australia. $Cheap? Please email for a quote*

05/18

PRINTED CIRCUIT BOARDS

NOTE: The listings below are for the PCB ONLY. If you want a kit, check our store or contact the kit suppliers advertising in this publication. For unusual projects where kits are not available, some have specialised components available – see the kit pages.

NOTE: Not all PCBs are shown here due to space limits but the SILICON CHIP Online Shop has boards going back to 2001 and beyond. For a complete list of available PCBs etc, go to *siliconchip.com.au/shop/3*. Prices are PCBs only, NOT COMPLETE KITS!

PRINTED CIRCUIT BOARD TO SUIT PROJECT:	PUBLISHED:	PCB CODE:	Price:
CLASSIC DAC MAIN PCB	APR 2013	01102131	$40.00
CLASSIC DAC FRONT & REAR PANEL PCBs	APR 2013	01102132/3	$30.00
CLASSIC-D 12V to ±35V DC/DC CONVERTER	MAY 2013	11104131	$15.00
LF/HF UP-CONVERTER	JUN 2013	07106131	$10.00
10-CHANNEL REMOTE CONTROL RECEIVER	JUN 2013	15106131	$15.00
IR-TO-455MHz UHF TRANSCEIVER	JUN 2013	15106132	$7.50
"LUMP IN COAX" PORTABLE MIXER	JUN 2013	01106131	$15.00
L'IL PULSER MKII TRAIN CONTROLLER	JULY 2013	09107131	$15.00
L'IL PULSER MKII FRONT & REAR PANELS	JULY 2013	09107132/3	$20.00/set
REVISED 10 CHANNEL REMOTE CONTROL RECEIVER	JULY 2013	15106133	$15.00
INFRARED TO UHF CONVERTER	JULY 2013	15107131	$5.00
UHF TO INFRARED CONVERTER	JULY 2013	15107132	$10.00
IPOD CHARGER	AUG 2013	14108131	$5.00
PC BIRDIES	AUG 2013	08104131	$10.00
RF DETECTOR PROBE FOR DMMs	AUG 2013	04107131	$10.00
BATTERY LIFESAVER	SEPT 2013	11108131	$5.00
SPEEDO CORRECTOR	SEPT 2013	05109131	$10.00
SiDRADIO (INTEGRATED SDR) Main PCB	OCT 2013	06109131	$35.00
SiDRADIO (INTEGRATED SDR) Front & Rear Panels	OCT 2013	06109132/3	$25.00/pr
TINY TIM AMPLIFIER (identical Headphone Amp [Sept11])	OCT 2013	01309111	$20.00
AUTO CAR HEADLIGHT CONTROLLER	OCT 2013	03111131	$10.00
GPS TRACKER	NOV 2013	15112131	$15.00
STEREO AUDIO DELAY/DSP	NOV 2013	01110131	$15.00
BELLBIRD	DEC 2013	08112131	$10.00
PORTAPAL-D MAIN BOARDS	DEC 2013	01111131-3	$35.00/set
(for CLASSIC-D Amp board and CLASSIC-D DC/DC Converter board refer above [Nov 2012/May 2013])			
LED Party Strobe (also suits Hot-Wire Cutter [Dec 2010])	JAN 2014	16101141	$7.50
Bass Extender MK2	JAN 2014	01112131	$15.00
L'il Pulser MK2 Revised	JAN 2014	09107134	$15.00
10A 230VAC MOTOR SPEED CONTROLLER	FEB 2014	10102141	$12.50
NICAD/NIMH BURP CHARGER	MAR 2014	14103141	$15.00
RUBIDIUM FREQ. STANDARD BREAKOUT BOARD	APR 2014	04105141	$10.00
USB/RS232C ADAPTER	APR 2014	07103141	$5.00
MAINS FAN SPEED CONTROLLER	MAY 2014	10104141	$10.00
RGB LED STRIP DRIVER	MAY 2014	16105141	$10.00
HYBRID BENCH SUPPLY	MAY 2014	18104141	$20.00
2-WAY PASSIVE LOUDSPEAKER CROSSOVER	JUN 2014	01205141	$20.00
TOUCHSCREEN AUDIO RECORDER	JUL 2014	01105141	$12.50
THRESHOLD VOLTAGE SWITCH	JUL 2014	99106141	$10.00
MICROMITE ASCII VIDEO TERMINAL	JUL 2014	24107141	$7.50
FREQUENCY COUNTER ADD-ON	JUL 2014	04105141a/b	$15.00
TEMPMASTER MK3	AUG 2014	21108141	$15.00
44-PIN MICROMITE	AUG 2014	24108141	$5.00
OPTO-THEREMIN MAIN BOARD	SEP 2014	23108141	$15.00
OPTO-THEREMIN PROXIMITY SENSOR BOARD	SEP 2014	23108142	$5.00
ACTIVE DIFFERENTIAL PROBE BOARDS	SEP 2014	04107141/2	$10.00/set
MINI-D AMPLIFIER	SEP 2014	01110141	$5.00
COURTESY LIGHT DELAY	OCT 2014	05109141	$7.50
DIRECT INJECTION (DI) BOX	OCT 2014	23108141	$5.00
DIGITAL EFFECTS UNIT	OCT 2014	01110131	$15.00
DUAL PHANTOM POWER SUPPLY	NOV 2014	18112141	$10.00
REMOTE MAINS TIMER	NOV 2014	19112141	$10.00
REMOTE MAINS TIMER PANEL/LID (BLUE)	NOV 2014	19112142	$15.00
ONE-CHIP AMPLIFIER	NOV 2014	01109141	$5.00
TDR DONGLE	DEC 2014	04112141	$5.00
MULTISPARK CDI FOR PERFORMANCE VEHICLES	DEC 2014	05112141	$10.00
CURRAWONG STEREO VALVE AMPLIFIER MAIN BOARD	DEC 2014	01111141	$50.00
CURRAWONG REMOTE CONTROL BOARD	DEC 2014	01111144	$5.00
CURRAWONG FRONT & REAR PANELS	DEC 2014	01111142/3	$30.00/set
CURRAWONG CLEAR ACRYLIC COVER	JAN 2015	5220/92	$25.00
ISOLATED HIGH VOLTAGE PROBE	JAN 2015	04108141	$10.00
SPARK ENERGY METER MAIN BOARD	FEB/MAR 2015	05101151	$10.00
SPARK ENERGY ZENER BOARD	FEB/MAR 2015	05101152	$10.00
SPARK ENERGY METER CALIBRATOR BOARD	FEB/MAR 2015	05101153	$5.00
APPLIANCE INSULATION TESTER	APR 2015	04103151	$10.00
APPLIANCE INSULATION TESTER FRONT PANEL	APR 2015	04103152	$10.00
LOW-FREQUENCY DISTORTION ANALYSER	APR 2015	04104151	$5.00
APPLIANCE EARTH LEAKAGE TESTER PCBs (2)	MAY 2015	04203151/2	$15.00
APPLIANCE EARTH LEAKAGE TESTER LID/PANEL	MAY 2015	04203153	$15.00
BALANCED INPUT ATTENUATOR MAIN PCB	MAY 2015	04105151	$15.00
BALANCED INPUT ATTENUATOR FRONT & REAR PANELS	MAY 2015	04105152/3	$20.00
4-OUTPUT UNIVERSAL ADJUSTABLE REGULATOR	MAY 2015	18105151	$5.00
SIGNAL INJECTOR & TRACER	JUNE 2015	04106151	$7.50
PASSIVE RF PROBE	JUNE 2015	04106152	$2.50
SIGNAL INJECTOR & TRACER SHIELD	JUNE 2015	04106153	$5.00
BAD VIBES INFRASOUND SNOOPER	JUNE 2015	04104151	$5.00
CHAMPION + PRE-CHAMPION	JUNE 2015	01109121/2	$7.50
DRIVEWAY MONITOR TRANSMITTER PCB	JULY 2015	15105151	$10.00
DRIVEWAY MONITOR RECEIVER PCB	JULY 2015	15105152	$5.00
MINI USB SWITCHMODE REGULATOR	JULY 2015	18107151	$2.50
VOLTAGE/RESISTANCE/CURRENT REFERENCE	AUG 2015	04108151	$2.50
LED PARTY STROBE MK2	AUG 2015	16101151	$7.50

PRINTED CIRCUIT BOARD TO SUIT PROJECT:	PUBLISHED:	PCB CODE:	Price:
UNIVERSAL LCD COLOUR MAXIMITE	SEPT 2015	24108151	$10.00
ULTRA-LD MK4 200W AMPLIFIER MODULE	SEP 2015	01107151	$15.00
9-CHANNEL REMOTE CONTROL RECEIVER	SEP 2015	15106151	$15.00
MINI USB SWITCHMODE REGULATOR MK2	SEP 2015	18107152	$2.50
2-WAY PASSIVE LOUDSPEAKER CROSSOVER	OCT 2015	01205141	$20.00
ULTRA LD AMPLIFIER POWER SUPPLY	OCT 2015	01109111	$15.00
ARDUINO ECG ELECTROCARDIOGRAPH	OCT 2015	07108151	$7.50
FINGERPRINT SCANNER – SET OF TWO PCBS	NOV 2015	03109151/2	$15.00
LOUDSPEAKER PROTECTOR	NOV 2015	01110151	$10.00
LED CLOCK	DEC 2015	19110151	$15.00
SPEECH TIMER	DEC 2015	19111151	$15.00
TURNTABLE STROBE	DEC 2015	04101152	$5.00
CALIBRATED TURNTABLE STROBOSCOPE ETCHED DISC	DEC 2015	04101162	$10.00
VALVE STEREO PREAMPLIFIER – PCB	JAN 2016	01101161	$15.00
VALVE STEREO PREAMPLIFIER – CASE PARTS	JAN 2016	01101162	$20.00
QUICKBRAKE BRAKE LIGHT SPEEDUP	JAN 2016	05102161	$15.00
SOLAR MPPT CHARGER & LIGHTING CONTROLLER	FEB/MAR 2016	16101161	$15.00
MICROMITE LCD BACKPACK, 2.4-INCH VERSION	FEB/MAR 2016	07102121	$7.50
MICROMITE LCD BACKPACK, 2.8-INCH VERSION	FEB/MAR 2016	07102122	$7.50
BATTERY CELL BALANCER	MAR 2016	11111151	$6.00
DELTA THROTTLE TIMER	MAR 2016	05102161	$15.00
MICROWAVE LEAKAGE DETECTOR	APR 2016	04103161	$5.00
FRIDGE/FREEZER ALARM	APR 2016	04104161	$5.00
ARDUINO MULTIFUNCTION MEASUREMENT	APR 2016	04116011/2	$15.00
PRECISION 50/60Hz TURNTABLE DRIVER	MAY 2016	04104161	$15.00
RASPBERRY PI TEMP SENSOR EXPANSION	MAY 2016	24104161	$5.00
1000B STEREO AUDIO LEVEL/VU METER	JUN 2016	01104161	$15.00
HOTEL SAFE ALARM	JUN 2016	03106161	$5.00
UNIVERSAL TEMPERATURE ALARM	JULY 2016	03105161	$5.00
BROWNOUT PROTECTOR MK2	JULY 2016	10107161	$10.00
8-DIGIT FREQUENCY METER	AUG 2016	04105161	$10.00
APPLIANCE ENERGY METER	AUG 2016	04116061	$15.00
MICROMITE PLUS EXPLORE 64	AUG 2016	07108161	$5.00
CYCLIC PUMP/MAINS TIMER	SEPT 2016	10108161/2	$5.00/pair
MICROMITE PLUS EXPLORE 100 (4 layer)	SEPT 2016	07109161	$20.00
AUTOMOTIVE FAULT DETECTOR	SEPT 2016	05109161	$10.00
MOSQUITO LURE	OCT 2016	25110161	$5.00
MICROPOWER LED FLASHER	OCT 2016	16109161	$5.00
MINI MICROPOWER LED FLASHER	OCT 2016	16109162	$2.50
50A BATTERY CHARGER CONTROLLER	NOV 2016	11111161	$5.00
PASSIVE LINE TO PHONO INPUT CONVERTER	NOV 2016	01111161	$5.00
MICROMITE PLUS LCD BACKPACK	NOV 2016	07110161	$7.50
AUTOMOTIVE SENSOR MODIFIER	DEC 2016	05111161	$10.00
TOUCHSCREEN VOLTAGE/CURRENT REFERENCE	DEC 2016	04110161	$12.50
SC200 AMPLIFIER MODULE	JAN 2017	01108161	$10.00
60V 40A DC MOTOR SPEED CON. CONTROL BOARD	JAN 2017	11112161	$10.00
60V 40A DC MOTOR SPEED CON. MOSFET BOARD	JAN 2017	11112162	$12.50
GPS SYNCHRONISED ANALOG CLOCK	FEB 2017	04202171	$10.00
ULTRA LOW VOLTAGE LED FLASHER	FEB 2017	16110161	$2.50
POOL LAP COUNTER	MAR 2017	19121171	$15.00
STATIONMASTER TRAIN CONTROLLER	MAR 2017	09103171/2	$15.00/set
EFUSE	APR 2017	04102171	$7.50
SPRING REVERB	APR 2017	01104171	$12.50
6GHz+ 1000:1 PRESCALER	MAY 2017	04112162	$7.50
MICROBRIDGE	MAY 2017	24104171	$2.50
MICROMITE LCD BACKPACK V2	MAY 2017	07104171	$7.50
10-OCTAVE STEREO GRAPHIC EQUALISER PCB	JUN 2017	01105171	$12.50
10-OCTAVE STEREO GRAPHIC EQUALISER FRONT PANEL	JUN 2017	01105172	$15.00
10-OCTAVE STEREO GRAPHIC EQUALISER CASE PIECES	JUN 2017	SC4281	$15.00
RAPIDBRAKE	JUL 2017	05105171	$10.00
DELUXE EFUSE	AUG 2017	18106171	$15.00
DELUXE-EFUSE UB1 LID	AUG 2017	SC4316	$5.00
MAINS SUPPLY FOR BATTERY VALVES (INC. PANELS)	AUG 2017	18108171-4	$25.00
3-WAY ADJUSTABLE ACTIVE CROSSOVER	SEPT 2017	01108171	$20.00
3-WAY ADJUSTABLE ACTIVE CROSSOVER PANELS	SEPT 2017	01108172/3	$20.00/pair
3-WAY ADJUSTABLE ACTIVE CROSSOVER CASE PIECES	SEPT 2017	SC4403	$10.00
6GHz+ TOUCHSCREEN FREQUENCY COUNTER	OCT 2017	04110171	$10.00
KELVIN THE CRICKET	OCT 2017	08109171	$10.00
6GHz+ FREQUENCY COUNTER CASE PIECES (SET)	DEC 2017	SC4444	$15.00
SUPER-7 SUPERHET AM RADIO PCB	DEC 2017	06111171	$25.00
SUPER-7 SUPERHET AM RADIO CASE PIECES	DEC 2017	SC4464	$25.00
THERMINO	JAN 2018	23112171	$2.50
PROPORTIONAL FAN SPEED CONTROLLER	JAN 2018	05111171	$2.50
WATER TANK LEVEL METER (INCLUDING HEADERS)	FEB 2018	21110171	$7.50
10-LED BARAGRAPH	FEB 2018	04101181	$7.50
10-LED BARAGRAPH SIGNAL PROCESSING	FEB 2018	04101182	$5.00
TRIAC-BASED MAINS MOTOR SPEED CONTROLLER	MAR 2018	10102181	$10.00
VINTAGE TV A/V MODULATOR	MAR 2018	02104181	$7.50
AM RADIO TRANSMITTER	MAR 2018	06101181	$7.50
HEATER CONTROLLER	APR 2018	10104181	$10.00
DELUXE FREQUENCY SWITCH	MAY 2018	05104181	$7.50
USB PORT PROTECTOR	MAY 2018	07105181	$2.50
2 x 12V BATTERY BALANCER	MAY 2018	11105161	$2.50

LOOKING FOR TECHNICAL BOOKS? YOU'LL FIND THE COMPLETE LISTING OF ALL BOOKS AVAILABLE IN THE BOOKS & DVDs" PAGES AT SILICONCHIP.COM.AU/SHOP

ASK SILICON CHIP

Got a technical problem? Can't understand a piece of jargon or some technical principle? Drop us a line and we'll answer your question. Send your email to silicon@siliconchip.com.au

Programmable Ignition System with a V12

I have a collection of interesting cars, bikes and engines and have a habit of putting what I consider to be better engines into some of my cars.

My Audi-engine Porsche 924 was not very brisk so some years ago I replaced it with a two-litre, six-cylinder supercharged Toyota motor.

Although I converted it to LPG and distributor ignition, it is very smooth and lively and the 924 didn't have computers to complicate things.

Three years ago, I bought a 1986 Porsche 928 in reasonable order for $6000. It has a 5-litre V8 that is jammed into the engine bay and has subsequently started leaking oil and is very difficult to service. So I replaced its engine with a V12 from a Toyota Century. It is very clean and compact and fitted in easily once I simplified the bulky intake manifolds.

Like the 924, I now have the V12 running mechanically with a Jaguar V12 distributor from the exhaust camshaft and an LPG fuel system. But none of the 928's complicated wiring, instruments or computer operate properly, making it undrivable.

Because the 928 injectors are batch fired, I hope to be able to extend the wiring to four more, put its cog sensor ring on the V12 flywheel, use its other sensors and air flow meter through the existing computer to do the basic management on the V12 and just design a separate ignition computer.

The Century V12 uses coil-on-plug wasted spark ignition, with three coils on the front of both banks (60° apart), so a six-cylinder coil-on-plug driver system, as used in the Ford Falcon, might work.

I have a Jaycar kit (KC5442) based on the 2007 Programmable Ignition System by John Clarke (siliconchip.com.au/Series/56) that I was going to use on the 924. Could I add a low-tension, timed feed to the six wasted spark coils and add an appropriate advance to the existing ignition kit?

Both banks have the usual 1-5-3-6-2-4 firing order. The 928 computer may need to be tricked into thinking that it is firing eight cylinders.

I have not altered any of the existing wiring or mechanical systems in the 928 in case I have to put the V8 back at some stage, hence my attempt to adapt the new engine to the existing systems. (I. I., via email)

● The Programmable Ignition System would work with the V12 in a wasted spark system that is essentially a 6-cylinder firing sequence as far as the ignition system is concerned. It would fire two spark plugs simultaneously, one of which is on a cylinder to be fired and the other on a cylinder that has opposite phase, ie, between the exhaust and intake stroke.

You would need a trigger (Reluctor, Hall Effect or similar) that runs from the distributor and presumably this is already in place. I am not sure if the Porsche 928 computer would co-operate with this system. Presumably, since you are planning on using the original V8 cog sensor from the 928, it should be none the wiser that you are running a V12.

WiFi Water Tank Level Meter for remote tanks

Can you estimate how much data the WiFi Water Tank Level Meter (February 2018; siliconchip.com.au/Article/10963) would use when transmitting the data via WiFi, at the default timing settings?

Many farms will not have access to WiFi due to the distances. The only solution would be a cheap prepaid 3G/4G modem/WiFi-Router. $10/month will buy 1.5GB.

In my case, the tank is 600 metres away and would be line-of-sight but for a heavily wooded area. In the past, I have tried external directional antennas and high powered WiFi repeaters but the signal at the tank is always unusable.

The same kit but using 433MHz or one of the CB data channels would be a winner for farmers. However, I do not have the technical expertise to modify the kit and would lose the data in the cloud facility. (N. McM., Yass River, NSW)

● The data transmitted for a single update should be under 1KB. One update every 10 minutes means 144 updates per day or around 4,500 per month. So around 4.5MB per month. Clearly, 1.5GB is more than enough.

We may look at doing a 4G version of the project at some point in the future but as you have suggested, it's probably easier to power a "personal hotspot" from the same 5V supply as the main unit.

They don't draw a lot of current as they often have an internal, rechargeable lithium-ion battery which lasts for many hours of use and they automatically go into a low-power mode when there is no traffic.

Cost and output power of AM Transmitter

I am interested in building the AM Radio Transmitter project from the March 2018 issue (siliconchip.com.au/Article/11004). Can you please tell me the approximate cost of the parts and the output power I can expect. (S. C., via email)

● Assuming you purchase the PCB and main IC from us and the remainder of the parts from Jaycar, the total will cost around $45 without the optional USB output. While there is 700mV RMS across L1, it is so inefficient and the wire antenna is so much shorter than ¼ of a wavelength (which would be 75m) that the radiated power is only a few microwatts.

Running Water Tank Level Meter from mains

I am interested in building the WiFi Water Tank Level Meter project which was published in the February 2018 issue (siliconchip.com.au/Article/10963).

As we have mains power at our

How does the Full-Wave Motor Speed Controller's mains supply work?

I can't make sense of the 5V power supply circuit in the Full-Wave 10A Motor Speed Controller (March 2018; siliconchip.com.au/Article/10998).

There seems to be no return path for that portion of mains energy being dumped through D1 on one cycle and then through D2 on the reverse mains polarity.

Are the two GNDs connected or should the 5V ground be connected to Active or am I missing something? (D. McI., Eastwood, NSW)

- The 5.1V rail is connected to mains Active via the 47Ω resistor and the wire passing through the centre of T1. So the 5.1V rail "floats" at mains Active potential with GND being 5.1V below this.

Supply current is coupled from the Neutral conductor, through the 470nF X2 capacitor and series 1kΩ resistor and then through either D1 or D2 into the 5V supply.

We covered the operation of this type of supply in detail in an article about SPICE simulations in the June 2017 issue, starting on page 38 (siliconchip.com.au/Article/10677).

In brief, we can consider what happens when the Neutral voltage is above the Active voltage and is rising, which will be the case during roughly one-quarter of the mains 50Hz cycle.

In this case, current will flow from Neutral into the 470nF capacitor, charging it up but also coupling some current through the 1kΩ series resistor, diode D1 and the 47Ω resistor, back to Active.

During this time, assuming the 470µF supply filter capacitor was charged up to 12V initially, it will be discharging as there is no source of current to replenish it

But when the Neutral voltage starts to fall (still being above active, but reducing), the 470nF capacitor will discharge via the 1kΩ series resistor and diode D2 into circuit ground.

In doing so, it charges the 470µF supply filter capacitor back up to 12V, with current flowing via the 47Ω resistor back to Active. This "returns" much of the energy drawn earlier back to the mains, leaving just the desired 12V across ZD1.

This same current flow will continue as Neutral becomes negative compared to Active, except now the 470nF X2 capacitor is charging up in the opposite direction. In the final mains quadrant, the 470nF capacitor discharges again while the 470µF filter capacitor also discharges, albeit more slowly. Then the process repeats.

tanks, is it possible to power it from a 5V power supply and do away with the charger/solar cells/power saving circuitry or would this involve changing the software? (B. S., Dunedin, New Zealand)

- Yes, you certainly can run it from a USB charger fed into the micro USB socket on the ESP8266 board. This is mentioned in passing as a possibility in the article.

We set up the prototype in the same manner, without the Elecrow charger board, and it worked fine. We ended up putting the mains USB charger in a separate IP65 enclosure and used silicone to seal the holes in the box for the mains input cable and USB output cable.

Resistor burned out due to short circuit

In December 2015, *EPE* Magazine re-published the High-Energy Multi-Spark Capacitor Discharge Ignition design by John Clarke (originally published in Silicon Chip in December 2014 and January 2015; siliconchip.com.au/Series/279). I have just finished building it.

I powered it up using a 12V DC bench supply but as soon as I did so, the 10Ω ¼W resistor in series with 16V 1W zener diode ZD1 burned out. I looked at the schematic again. When the rail voltage isn't near 16V DC, that zener will remain off.

Won't this result in the 10Ω resistor frying? Obviously, the resistor and zener values are wrong. (J. J., South Africa)

- When the supply voltage is below 16V and ZD1 does not conduct, this should not damage the 10Ω resistor as very little current will be flowing through it. We had no such problems on our prototype.

If this resistor burns out with a 12V DC supply, that strongly suggests that either ZD1 has been fitted backwards or there is a short circuit across either IC1, IC2 or one of their bypass capacitors.

Check for correctly oriented components and that you have no accidental solder bridges. You may have to isolate sections of the circuit to find where the short circuit is located.

Question about zero ohm resistors

I am interested in the Earthquake Early Warning Alarm project featured in the March 2018 issue (siliconchip.com.au/Article/10994).

However, I live on a reasonably busy road with speed humps not far from the house and heavy trucks can make quite a rattle when they bounce over them (particularly if they are speeding, which unfortunately often happens).

However, I assume that I should be able to circumvent this by adjusting VR1, as suggested at the end of the article.

There is one thing that puzzles me, though: what's the story with the zero ohm resistors? Until I read the article, I was not aware that such a component even existed! Why did you use these in the prototype when two bits of wire would do, as you suggest?

One final query, surely that photo on the cover and at the start of the article is a still from a movie? Surely that is not genuine?! Scary, if it is! (G. G., Figtree, NSW)

- Zero ohm resistors are (or at least were) commonly used where wire links are required since they can easily be bent to standard lengths, can be inserted by automated equipment designed for handling resistors and provide some insulation.

For example, this allows you to have wire links passing under the zero ohm resistors without them shorting.

There are also surface-mount zero ohm resistors and these can be handy to allow signals to jump over tracks on a two-layer board when there are already tracks in the way on the other layer.

Also, purchased in sufficient quantities, zero ohm resistors work out cheaper than tinned copper wire. We've seen them supplied in kits where wire links are required.

In this case, we needed links about the same length as a resistor so using zero ohm resistors was the simplest approach.

Stationmasters not working properly

I had two Stationmaster train controllers built for me by someone who advertises in your magazine.

Both are exhibiting the same strange symptoms. With a 15V DC supply, I measured a triangular waveform at pin 7 of IC1 but it was only about 880Hz, not 8kHz as stated in the article. The amplitude was about 840mV.

I also measured a square wave at pin 1 of IC1 of about 900Hz, with an amplitude just under 3V. The voltage at the V_{CC} test point was 5V and 2.5V at the $V_{CC} \div 2$ test point.

I am able to adjust VR1 to get the LEDs to switch off and on (as per the instructions).

I can also measure a triangle wave on pins 9 and 11 of IC1 but nothing on pins 10 and 13, as shown in the diagram on page 37 of the article. The output waveforms on the TRACK terminals look like PWM but only at about 5V peak-to-peak.

Strangely, as I rotate the speed control clockwise, while the output pulse width increases, the whole waveform shifts down the Y-axis. At maximum speed (forward or reverse), the waveform disappears completely.

I contacted the person who assembled the two kits for me and his response was to contact you! Can you help me? (P. S., Banyo, Qld)

● The frequency may be incorrect if the resistors connecting to IC1a and IC1b are incorrect or the 10nF capacitor is actually 100nF. Check the resistors, especially the 1kΩ resistor between pins 7 and 3 and the 10kΩ resistor between pins 1 and 6.

The waveforms at pins 10 and 13 of IC1c/IC1d should not be triangular but rather a DC level, as shown in blue in Fig.4. The caption of Fig.4 is incorrect. It should be referring to the yellow and red traces as the IC1 pin 9 and pin 12 signals.

If you don't have the full voltage swing at the track, IC3 may not be receiving the required voltage at pin 5. That voltage will depend on the supply applied to CON1. Check also that pins 7 and 1 are connected to ground.

Also, make sure your oscilloscope is DC coupled and correctly grounded.

Where to get acoustic filling for speakers

Can you tell me where you got the acoustic BAF filling for the Majestic speakers? It's hard to find any kind of acoustic filling, but especially the bonded acetate fibre kind. (P. T., Casula, NSW)

● This wadding is known by several names: innerbond, acoustic filling, BAF (bonded acetate fibre) etc. Jaycar have it, their catalog code is AX3694.

Using a three-terminal coil for Jacob's Ladder

I have a three-terminal ignition coil (rather than the VS Commodore one specified, which has two terminals). Can this be used for the project (February 2013; siliconchip.com.au/Article/2369) and if so, how do I wire it up? (P. M., Alfredton, Vic)

● As far as we are aware, three-terminal ignition coils include an IGBT to switch current to the primary winding. So there is a +12V terminal for the coil primary and the other end of the coil is switched to ground via the IGBT. The second terminal is the ground/chassis terminal and the third terminal is the IGBT gate connection.

For the Jacob's Ladder project, you could bypass the IGBT driver that's in the coil assembly and connect directly to the coil. Alternatively, remove the driver IGBT from the Jacob's Ladder PCB and connect the gate drive to the IGBT gate connection of the coil.

Induction Motor Speed Controller at 60Hz

I wonder if it is possible to change the 1.5kW Induction Motor Speed Controller from the April and May 2012 issues (siliconchip.com.au/Series/25) to operate from 0 to 60Hz. (B. F. S., Sao Paolo, Brazil)

● If you set the over-speed (O/S) DIP switch on, the range is 0-75Hz. You could limit it to 0-60Hz by inserting a resistor between the +3.3V rail and the speed pot.

For a 10kΩ pot, use 2.4kΩ. Or use a second potentiometer wired as a rheostat (variable resistor) and adjust

Fitting a modern mains cord to a vintage radio

I am currently restoring a vintage Kreisler 1954 Duplex radio. It's an 11-51 5-valve console radiogram. I've hit a snag regarding the mains power cable.

By today's electrical standards it's highly illegal and potentially dangerous.

I'd like to replace the cable with a legal, safer one but I have no way to do it safely. The Active wire is soldered to two tags on the on/off pot and the Neutral soldered to another tag. There is no Earth connection. How can I get around this? (R. B., Nowra, NSW)

● Without a view of the chassis, it is not possible to make a specific suggestion. However, in most cases, it is possible to fit a 3-core flex with a 3-pin plug.

You can always find a point to attach a solder or crimp lug for the chassis to Earth and while it would be better to have an insulated terminal block for the Active and Neutral connections, if they are sleeved, that will improve safety.

The 2-core flex or cotton-covered 3-core cord in all old sets should be replaced as a matter of course. They are usually perished, frayed or both. And throw out the old mains plug – it is usually hazardous.

There are several ways to securely anchor the cord inside the chassis. You could have it enter via a hole (fitted with a rubber grommet) in the rear of chassis and then fit a separate cord clamp.

Alternatively, you could take the modern approach and fit a cord-grip gland that's super glued tight as we do in many of our mains operated projects these days.

We know that most restorers don't bother but you never know when a poorly anchored power cord may create a serious hazard to you or someone in your family.

Subscribe to SILICON CHIP and you'll not only save money but we GUARANTEE you'll get your copy!

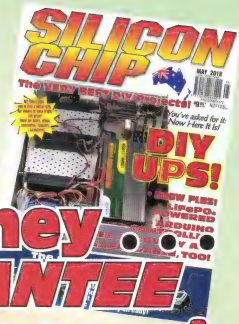

When you subscribe to SILICON CHIP (printed edition) in Australia, we GUARANTEE that you will never miss an issue.

Subscription copies are despatched in bulk at the beginning of the on-sale week (due on sale the last THURSDAY of the previous month). It is unusual for copies to go astray in the post but when we're mailing many thousands of copies, it is inevitable that Murphy may strike once or twice (and occasionally three and four times!).

So we make this promise to you: if you haven't received your SILICON CHIP (anywhere in Australia) by the middle of the month of issue (ie, issue datelined "June" by, say, 15th June), send us an email and we'll post you a replacment copy in our next mailing (we mail out twice each week on Tuesday and Friday).

Send your email to: missing_copy@siliconchip.com.au

- ✔ Remember, it's cheaper to subscribe anyway . . . do the maths and see the saving!
- ✔ Remember, we pick up the postage charge – so you Save even more!
- ✔ Remember, you don't have to remember! It's there every month in your letter box!
- ✔ Remember, your newsagent might have sold out – and you'll miss out!
- ✔ Remember, there's also an on-line version you can subscribe to if you're travelling.

Convinced? We hope so. And we make it particularly easy to take out a subscription - for a trial 6-month, a standard 12-month or even a giant 24-month sub with extra savings.

Here's how: simply go to our website (siliconchip.com.au/subs) – enter your details and pay via Paypal or EFT/Direct Deposit. You can order by mail with a cheque/money order, or we can accept either Visa or Mastercard (sorry, no Amex nor Diners').

If mailing, send to SILICON CHIP, PO Box 139, Collaroy NSW 2097, with your full details (don't forget your address and all credit card details including expiry!).

We're waiting to welcome you into the SILICON CHIP subscriber family!

Double precision floating point maths for the Micromite

Is there any thought to have a version of MMBasic that supports 64-bit floating point maths, ie, double precision?

This would allow the Micromite Plus to be more easily used for astronomical projects. (G. L., Wynn Vale, NSW)

● Geoff Graham replies: As it happens, I have been experimenting with double precision floating point on the Micromite Plus and if you would like to try it out you can download it from: http://geoffg.net/Downloads/Micromite/Micromite_V5.04.09_Beta.zip

This beta also includes other changes introduced in previous betas.

For example, it includes the fix for image corruption of 5-inch displays, the ability to use display drivers written in BASIC, static variables, etc.

My plan for future beta versions is to keep adding small improvements (incrementing the beta number) and keep the beta open for some months until it has accumulated enough changes and is stable enough to warrant a full release. If you find any bugs in this new version of the firmware, please let me know.

it until you get 60Hz output with the speed pot at maximum.

Dual transducer Anti-Fouling fuse blown

We purchased your excellent kits for anti-fouling our NOELEX 30 yacht using two transducers (New Marine Ultrasonic Anti-Fouling Unit, May-June 2017; siliconchip.com.au/Series/312).

They were assembled and installed, then switched on December 3rd, 2017. They have operated continuously, except for the odd time when they were inadvertently switched off by mistake, usually for only a few minutes each time.

The performance was good and fully up to the standard expected in your articles in the SILICON CHIP magazine sent with the electronic kits. We are very pleased with the unit and with your whole professional sales process.

However, yesterday we discovered the 3A fuse had blown. I replaced this fuse but now I find it does not power up as usually expected.

Now, when switched on, the power light comes on as before, but then goes off and the only light working is the fault light which blinks roughly every two seconds.

I tried switching off, disconnecting the two transducers then switching on again, but we found this made no difference. What else could be at fault? What faults activate the fault light? Your help will be appreciated. (C. B., Christchurch, NZ)

● A blown fuse probably means a shorted Mosfet or shorted turn in a transformer or a short in the ultrasonic transducer wiring.

For each Mosfet, check for a dead short between the drain and source of Q1, Q2, Q3 or Q4. Depending on your multimeter, you may need to desolder each Mosfet to get a sensible reading.

A Mosfet will read high ohms (megohms) if it is OK or near to zero ohms if shorted. In each case, before making the measurement, short the gate to the source to ensure the Mosfet is not switched on.

It's also best to swap the multimeter leads and check each Mosfet in both polarities to ensure that the body diode is not affecting the reading. If the Mosfet is shorted, the resistance reading will be low with both polarities.

The resistance of the wiring to the transducer (when disconnected from the Anti-Fouling unit) should be very high after its capacitance charges via the multimeter. If the Mosfets and transducer wiring are OK, the transformer is the remaining suspect.

Questions on safe mains wiring

I have a few questions related to mains wiring for projects. I notice that the Currawong amplifier wiring shown on pages 93 & 94 of the December 2014 issue (and page 47 of the October 2016 issue) has a piece of heatshrink on both ends of the active wire from the IEC socket fuse to the power switch and is referred to as "heatshrink-covered wire to Active".

Other SILICON CHIP amplifier and mains-powered projects I have looked at do not appear to have that exact requirement. Can you please tell me the purpose of the heatshrink tubing? Can I solder the mains Earth to an uninsulated ring lug rather than crimping to an insulated ring lug?

I'm using an IEC power connector from Jaycar with mains connection, fuse and a double pole switch. In view of my initial question about heatshrink, does the short active wire required from the fuse terminal to the switch need the heatshrink on each end and is soldering acceptable rather than crimp terminals?

All connections will be insulated with heatshrink, cable-tied to minimise movement and covered with a heatshrink hood as detailed in the Currawong project. (M. N., North Rocks, NSW)

● The reason behind covering the IEC connector with large diameter heatshrink is to prevent any accidental contact of wires from the right speaker terminals to mains connections, should they come adrift. The Active and Neutral wires and the metal strip connecting the fuse to Active on the back of the IEC connector are covered.

You could also use a moulded rubber cover (Jaycar PM-4016) instead of the heatshrink tubing. We don't always use this full enclosure method of protection as it depends on whether low voltage wiring is close by.

The rear of an IEC fused connector does have exposed metal where the fuse connects to the Active terminal (and we recommend covering this with silicone sealant) and insulated crimp connectors still have a small amount of bare metal exposed on the IEC connector terminals between where the insulation on the crimp connector ends before meeting the IEC housing.

While fingers might not make easy contact with the very small gap of exposed bare metal, a loose wire can.

Yes, you can use uninsulated lugs for the mains Earth connections and you can solder rather than crimp them. This is because accidental contact with Earth is safe.

Any Neutral or Active wire terminal connection that is exposed should be covered with insulation such as

heatshrink tubing to prevent direct accidental contact with mains voltages. That includes wiring on the mains switch and the spare terminal(s) of a double throw switch.

Soldering is acceptable rather than crimping so long as the wires are cable tied together (which is required anyway). It is important when soldering to the IEC connector to check that the terminals are correctly soldered with sufficient heat and flux to ensure the joints fully adhere to the terminals and do not form dry joints.

Programming Arduino projects with a Mac

I'm very interested in the WiFi Water Tank Level Meter in the February 2018 issue (siliconchip.com.au/Article/10963). Being dependent on a large concrete tank for our farm household water I need such a device.

Currently, I bribe grandchildren to do this but as they become older, the idea of climbing up on a 3.6m high concrete tank appeals less despite generous bribes.

During the course of the article, many mentions are made of using a PC to program and upload data to the Arduino-based unit. My question is, will an Apple MacBook do this task? The article seems to read as though it's a Windows-based program. My confusion is that often PC is used to denote a Windows-based personal computer or laptop. (D. C., Cambooya, Qld)

● The Arduino IDE is available for Windows, Mac OS X 10.7 or newer and Linux. See: www.arduino.cc/en/Main/Software So if your MacBook runs Mac OS X 10.7 or newer (or it can be upgraded) then you should be able to follow the procedures set out in the magazine.

Older versions of the Arduino IDE (10.6) will work on older versions of Mac OS X (eg, 10.6.8 and before).

Note though that we are not sure whether the sensors used are safe to place in drinking water tanks.

Control DC motor speed with AC motor current

I have made an automatic saw which is mounted on slides and driven by a speed adjustable geared DC motor. The speed is altered by a variable voltage supply so the saw motor is not overloaded by the forward travel into the work. The saw motor is a universal type.

I want to know how to link the forward travel speed to the load being encountered by the saw motor for a new saw. The load will vary during the cut operation.

I am planning to control the DC motor speed using either Jaycar kit KC5502 (20A 12/24V DC Motor Speed Controller Mk.2, June 2011; siliconchip.com.au/Article/1035) or KC5225 (High-Current Speed Controller For 12V/24V Motors, June 1997; siliconchip.com.au/Article/4868). But both of these motor speed controllers are manually controlled.

The first stage will be the fast approach of the saw to the work, a second stage is a very slow approach as the moving blade contacts the work and then the automatic stage where the current draw of the saw motor varies the forward travel speed. It will have to be reversible but I can do that with a toggle switch.

The new saw motor I am planning to use draws 9A at full load. I would like to be able to set the automatic load speed to maintain around 8-8.5A to get the best forward cut speed without erratic loading of the cut motor.

Thank you for any help you can give. (G. T., Londonderry, NSW)

● Take a look at the circuit of our Full Wave, 230VAC Universal Motor Speed Controller in the March 2018 issue. In particular, observe the use of the current transformer, rectifier and filtering to measure the motor current of the mains-powered motor. You could copy that part of the circuit to measure your saw motor current.

The current transformer provides mains isolation as the insulated mains wire only passes through the centre core of the transformer and the secondary winding of the transformer is isolated.

The voltage obtained can be used to provide the speed control for the Jaycar kit KC5502 motor speed controller, where the speed potentiometer can be replaced with a DC control voltage applied to where the wiper would connect.

Note that you will need to provide amplification, voltage inversion and level shifting using an op amp to get the required speed control against saw motor current. The voltage inversion is important since you want the DC motor speed to reduce as the saw motor's current draw increases when it is heavily loaded.

Motor Speed Controller thermistor woes

I have purchased and built three K6036 kits for the 10A/230V Universal Motor Speed Controller design published in the February and March 2014 issues (siliconchip.com.au/Series/195). I had no problems with assembly and all three ran fine for a short time.

I connected a 1600W vacuum cleaner to test. I can vary the speed easily all the way down to stop. But after running for about three minutes at say 75% load, the speed pot (VR1) no longer allows me to get full power.

If I run with the top off the box and use a vacuum cleaner (with plastic piping for safety) close to the NTC thermistor, after about 15 seconds, the speed increases to full speed or near full speed. I can repeat this on all the kits

I have emailed Altronics and they were helpful and suggested contacting you and one of your technical gurus who designed this circuit.

What do you recommend? Should the thermistor be removed? It is hot to touch but technically the resistance should drop. Am I misunderstanding something?

I shorted out the NTC thermistor but used a heat gun with heating turned off to reduce the current demand. Once running, I turned up the heat and increased load but the motor speed becomes erratic and it will not run at full speed. So perhaps the thermistor was just clouding the issue.

My plan is to control these kits from a PC via an opto-isolation circuit, to control 2000W vacuum cleaners. It is to control boundary layers in my 10% scale wind tunnel. (J. B., Surrey Hills, Vic)

● The heat gun is probably producing interference that is making the controller run erratically.

We still suspect the NTC thermistors are at fault as they should drop in resistance with more heat and not restrict the maximum speed.

Your tests suggest that the thermistors are working the other way and this may indicate that they are a Positive Temperature Coefficient (PTC) type and not the NTC type specified.

We suggest you check for any

markings on the thermistors and check the kit notes to see if a part code is supplied, in an attempt to determine whether they are PTC or NTC.

Failing that, connect a DMM set to measure resistance across one thermistor and heat it with a heat gun or similar. If the resistance increases as it gets hotter, you have been supplied the wrong part.

Relay problem with Arduino LC Meter

I have built the Arduino LC Meter project (June 2017; siliconchip.com.au/Article/10676) and have encountered two problems.

Firstly, the relay appears to have incorrect pin connections. The impulse to the relay coil should go to pin 13, not pin 2 as in the circuit diagram.

Wired up as per the article, the relay coil does not receive the calibration pulse required as the coil is not energised. Pin 2 not being connected to anything in the relay.

Secondly, the Arduino sketch, in the comments, mentions that the serial interface with the new chip should have the serial address revised in the code, but the actual revised address is not provided.

My inexperience may be the problem, but changing the address to 38 did not work. (W. S., Lake Cathie, NSW)

- According to the data sheet of the relay we specified in the parts list, pins 2 and 13 are internally joined. So the circuit and wiring seem to be correct as presented. Are you sure you have the correct relay? It should be labelled PRMA1A12 or TRR1A05D00.

Which serial interface address to use was explained on pages 82 and 83 of the March 2017 issue, in the article on the serial LCD module (siliconchip.com.au/Article/10584).

If your module has the PCF8574AT chip, it will probably be set up for an address of 3F hex.

Fitting a grille to the Majestic speakers

I am building a pair of Majestic speakers and looking forward to getting them working soon. I noticed there was an error with the specification of the screws to attach the Celestion horn. They should be M6 size, not 6BA.

Also, the exposed cones of the woofers are a bit of a worry. I figure they're bound to end up getting pranged before too long. I was thinking of fitting a grille to each woofer, Altronics Cat C3715.

I was wondering if this would compromise the sound quality. Would you recommend fitting something like that or should I use a conventional speaker grille made from grille cloth on a frame? (B. D., Ashburton, Vic)

- If you have pets or young children in your home, protective grilles are prudent insurance. They will have no effect on the sound quality. Grille cloth may look better but it offers less protection and may rattle or buzz at high bass levels.

Nicholas Vinen attached grilles to his Majestics (see the photo below). He bought them from eBay rather than using the Altronics grilles, only because the photo on the Altronics website makes them look rather "chunky" and he preferred a finer mesh.

He attached them using the clips supplied with the grilles but had to add small springs and rubber pads (from Bunnings) to space them off from the face of the speaker, as the speaker surround sits about 10mm proud of the front panel.

The supplied screws were long enough to pass through and compress the springs to hold the clips in place.

Celebrating 30 Years

You could also mount the clips at 45° angles rather than 90° as some constructors may prefer the resulting appearance.

Is lower amplifier distortion noticeable?

I have an *Electronics Australia* Mosfet-based amp I built sometime around 1990. There is a SILICON CHIP amplifier design (March - May 2012; siliconchip.com.au/Series/27) which appears to have about 10 times less distortion.

I was wondering whether the reduction in distortion provided by the newer design was actually audible.

Given the best speakers create distortion of about 0.5% THD, does the elimination of a tiny fraction of a percent distortion from the power amplifier actually matter? Or are there other factors involved apart from sinewave distortion such as response to transients?

I would be interested to understand more about this. I think other readers would also be interested in this. By the way, thanks for a great magazine. (B. D., via email)

- The Ultra-LD Mk3 (described in 2012; siliconchip.com.au/Series/27) and the Ultra-LD Mk4 (described in 2015; siliconchip.com.au/Series/289) are superior to anything we described in SILICON CHIP ten years before and orders of magnitude better than anything ever described in *Electronics Australia* or in any other magazine, for that matter.

Also as Douglas Self points out, Mosfet-based amplifiers are not capable of achieving the low levels of distortion of a good bipolar transistor based design.

Unless you have cloth ears, you will certainly notice a big improvement in sound quality when listening to CDs. Do not bother making comparisons with MP3 recordings unless they have the highest possible bit-rate and even then they are not as good as the best CDs.

While it might seem that the higher distortion from loudspeakers would mask the much lower distortion of amplifiers, that is not the case.

The quality of distortion from loudspeakers tends to be quite different to that from amplifiers. With that said, your system will sound even better if you have low distortion loudspeakers. SC

MARKET CENTRE

Cash in your surplus gear. Advertise it here in SILICON CHIP

FOR SALE

tronixlabs.com.au – Australia's best value for supported hobbyist electronics from Adafruit, SparkFun, Arduino, Freetronics, Raspberry Pi – along with kits, components and much more – with same-day shipping.

PCBs MADE, ONE OR MANY. Any format, hobbyists welcome. Sesame Electronics Phone 0434 781 191.
nev-sesame@outlook.com
www.sesame.com.au

PCB MANUFACTURE: single to multi-layer. Bare board tested. One-offs to any quantity. 48 hour service. Artwork design. Excellent prices.
Check out our specials:
www.ldelectronics.com.au

LEDs, BRAND NAME and generic LEDs. Heatsinks, fans, LED drivers, power supplies, LED ribbon, kits, components, hardware, EL wire.
www.ledsales.com.au

Master Instruments

AUSTRALIA'S BATTERY EXPERTS

Australian owned and operated manufacturer and wholesaler with strong global partnerships in the portable power industry, supplying Lithium Ion, Lithium Iron Phosphate, Nickel Metal Hydride (NiMH), SLA/VRLA and primary batteries as well as chargers, analysers, power supplies and related products in the Australian / New Zealand and Oceania region.

Our scope includes the following:

- Consumer & Retail
- Industrial Applications
- Government Agencies
- Resources Sector
- Custom Pack Builds
- Repacks & Refurbs
- Engineering Services
- Importer & Distributor

WHAT CAN MASTER INSTRUMENTS DO FOR YOU? CONTACT US

NSW: (02) 9519 1200 WA: (08) 9302 5444 VIC: (03) 9872 6422
sales@master-instruments.com.au Find us

Where do you get those HARD-TO-GET PARTS?

Where possible, the SILICON CHIP On-Line Shop stocks hard-to-get project parts, along with PCBs, programmed micros, panels and all the other bits and pieces to enable you to complete your SILICON CHIP project.

SILICON CHIP ON-LINE SHOP

www.siliconchip.com.au/shop

KIT ASSEMBLY & REPAIR

DAVE THOMPSON (the Serviceman from SILICON CHIP) is available to help you with kit assembly, project troubleshooting, general electronics and custom design work. No job too small. Based in Christchurch, NZ but service available Australia/NZ wide.
Email dave@davethompson.co.nz

VINTAGE RADIO REPAIRS: electrical mechanical fitter with 36 years experience and extensive knowledge of valve and transistor radios. Professional and reliable repairs. All workmanship guaranteed. $17 inspection fee plus charges for parts and labour as required. Labour fees $38 p/h. Pensioner discounts available on application. Contact Alan, VK2FALW on 0425 122 415 or email bigalradioshack@gmail.com

KEITH RIPPON KIT ASSEMBLY & REPAIR:
* Australia & New Zealand;
* Small production runs.
Phone Keith 0409 662 794.
keith.rippon@gmail.com

ADVERTISING IN MARKET CENTRE

Classified Ad Rates: $32.00 for up to 20 words (punctuation not charged) plus $1.20 for each additional word. Display ads in Market Centre (minimum 2cm deep, maximum 10cm deep): $82.50 per column centimetre per insertion. All prices include GST. Closing date: 5 weeks prior to month of sale. To book, email the text to silicon@siliconchip.com.au and include your name, address & credit card details, or phone Glyn (02) 9939 3295 or 0431 792 293.

WARNING!

SILICON CHIP magazine regularly describes projects which employ a mains power supply or produce high voltage. All such projects should be considered dangerous or even lethal if not used safely.

Readers are warned that high voltage wiring should be carried out according to the instructions in the articles. When working on these projects use extreme care to ensure that you do not accidentally come into contact with mains AC voltages or high voltage DC. If you are not confident about working with projects employing mains voltages or other high voltages, you are advised not to attempt work on them. Silicon Chip Publications Pty Ltd disclaims any liability for damages should anyone be killed or injured while working on a project or circuit described in any issue of SILICON CHIP magazine.

Devices or circuits described in SILICON CHIP may be covered by patents. SILICON CHIP disclaims any liability for the infringement of such patents by the manufacturing or selling of any such equipment. SILICON CHIP also disclaims any liability for projects which are used in such a way as to infringe relevant government regulations and by-laws.

Advertisers are warned that they are responsible for the content of all advertisements and that they must conform to the Competition & Consumer Act 2010 or as subsequently amended and to any governmental regulations which are applicable.

Coming up in Silicon Chip

Altium Designer 2018 review
We have been using Altium Designer to draw up circuits and design PCBs for many years now. In that time, quite a few improvements have been made to the software. We'll describe the new features and also point out some of the pre-existing features that have been improved or are particularly useful.

El Cheapo Modules – RF attenuators
Jim Rowe describes a programmable, 63-step, 4GHz RF digital step attenuator module with a range of applications.

Introduction to programming the Cyprus CY8CKIT
This low-cost module incorporates a 32-bit microcontroller and a set of reprogrammable analog circuitry which can be used for a wide range of tasks.

Touchscreen GPS Frequency Reference
This new design is much more compact with many new features including multiple programmable-frequency outputs, ultra low-drift operation, improved status display and 5V operation.

The Latest Agricultural Technology
The rapid advancement of technology is having a huge effect on agriculture and Australia is at the forefront. We take a look at some of the latest robots and monitoring devices aimed at increasing crop yields and food quality and reducing the environmental impact of farming.

LiFePO$_4$-based Uninterruptable Power Supply
The second article in this series will have details of the control circuit and shield PCB, and describe how to build the case and wire up the components.

Note: these features are planned or are in preparation and should appear within the next few issues of Silicon Chip.

The June 2018 issue is due on sale in newsagents by Thursday, May 24th. Expect postal delivery of subscription copies in Australia between May 23rd and June 8th.

Advertising Index

Altronics ..... FLYER
Dave Thompson 103
Digi-Key Electronics 3
Emona ..... IBC
Hare & Forbes ..... OBC
Jaycar IFC,49-56
Keith Rippon Kit Assembly 103
LD Electronics 103
LEACH Co Ltd 27
LEDsales 103
Master Instruments 103
Microchip Technology 5
Ocean Controls 6
PCBcart 9
Sesame Electronics 103
Silicon Chip Shop 42,94-95
Silicon Chip Subscriptions 99
Silicon Chip Wallchart 89
SC Radio, TV & Hobbies DVD 13
The Loudspeaker Kit.com 81
Tronixlabs 103
Vintage Radio Repairs 103
Wagner Electronics 7
WIA Radio & Electronics Conv 11

Notes & Errata

Majestic Speakers, June & September 2014: In the September issue, the two screws used to attach the tweeter to the horn are listed as 6BA x 20mm when they should be M6 x 20mm. These same two screws are not mentioned in the parts list in the June issue.

Battery-Pack Cell Balancer, March 2016: there is a risk of damage to IC1 and IC2 when batteries with many cells are initially plugged in. Two small (¼W) 10kΩ through-hole resistors can be added to solve this. Solder them between pin 2 and pin 15 of both IC1 and IC2. These pins are adjacent but on opposite sides of the IC packages. The resistor bodies will need to be kept close to the ICs to avoid interfering with the battery header (CON1). Alternatively, they can be soldered from pin 15 of IC3 to ground (pin 20), and the other from pin 16 of IC3 to ground.

WiFi Water Tank Level Meter, February 2018: the WeMos D1 R2 board we used in this project was actually a clone made by Robotdyn; the original D1 R2 does not have a connection for an external antenna. The boards in our shop (Cat SC4414) are the same as the board shown in the article.

6-Element VHF TV Yagi Antenna, February 2018: a photo caption on page 40 says that the dipole ends are made using 39mm lengths of aluminium tubing but they are closer to 30mm; refer to Fig.1 on page 39 which correctly shows the distance between the semicircular cut-outs at each end as 27mm.

AM Radio Transmitter, March 2018: the circuit diagram on page 67 (Fig.2) shows the 10nF antenna coupling capacitor connected to the wrong end of antenna coil L1. Also, Mosfet Q3 has the wrong part number in the parts list. It should be IPP80P03P4L04, as in the circuit and overlay diagrams.

The Clayton's "GPS" Time Signal Generator, April 2018: the parts list gave an incorrect Jaycar part number for the D1 Mini ESP8266 module. It should be XC3802.

"Rigol Offer Australia's Best Value Test Instruments"

Oscilloscopes

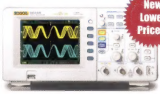

RIGOL DS-1000E Series

- 50MHz & 100MHz, 2 Ch
- 1GS/s Real Time Sampling
- USB Device, USB Host & PictBridge

FROM $379 ex GST

RIGOL DS-1000Z Series

- 50MHz, 70MHz & 100MHz, 4 Ch
- 1GS/s Real Time Sampling
- 24Mpts Standard Memory Depth

FROM $579 ex GST

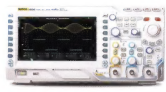

RIGOL DS-2000E/A Series

- 70MHz, 100MHz & 200MHz, 2 Ch
- 1GS/s & 2GS/s Real Time Sampling
- From 14Mpts Memory Depth

FROM $912 ex GST

Function/Arbitrary Function Generators

RIGOL DG-1022

- 20MHz Maximum Output Frequency
- 2 Output Channels
- USB Device & USB Host

ONLY $539 ex GST

RIGOL DG-1000Z Series

- 25MHz, 30MHz & 60MHz
- 2 Output Channels
- 160 In-Built Waveforms

FROM $517 ex GST

Multimeters

RIGOL DM-3058E

- 5 1/2 Digit
- 9 Functions
- USB & RS232

ONLY $673 ex GST

Power Supplies

RIGOL DP-832

- Triple Output 30V/3A & 5V/3A
- Large 3.5 inch TFT Display
- USB Device, USB Host, LAN & RS232

ONLY $649 ex GST

Spectrum Analysers

RIGOL DSA Series

- 500MHz to 7.5GHz
- RBW settable down to 10 Hz
- Optional Tracking Generator

FROM $999 ex GST

Real-Time Analysers

RIGOL RSA-5000 Series

- 9kHz to 3.2GHz & 6.5GHz
- RBW settable down to 1 Hz
- Optional Tracking Generator

FROM $11,499 ex GST

Buy on-line at www.emona.com.au/rigol

Sydney
Tel 02 9519 3933
Fax 02 9550 1378

Melbourne
Tel 03 9889 0427
Fax 03 9889 0715

Brisbane
Tel 07 3392 7170
Fax 07 3848 9046

Adelaide
Tel 08 8363 5733
Fax 08 83635799

Perth
Tel 08 9361 4200
Fax 08 9361 4300

EMONA

email testinst@emona.com.au

web www.emona.com.au

HARE & FORBES MACHINERYHOUSE

"Setting the standard for Quality & Value"

A family owned Australian business

Established 1930

THE INDUSTRY'S CHOICE!

CNC Machinery | Metal Working | Sheet Metal Fabrication | Wood Working | Workshop & Automotive | Lifting Handling | Cutting Tools | Machine Tool Accessories | Measuring Equipment

MH-826 8M Tape Measure

- 8 Metre
- 25mm width
- Belt clip on side

$10 ~~$12.16~~ (M750)

TCS-3 - Mobile Tool Cabinet Seat

- 3 x drawers with ball bearing slides
- 420 x 235mm padded seat
- 2 x magnetic side trays
- 406mm seat height
- 360° swivel wheels

$99 ~~$110~~ (A001)

GSP-795 Pneumatic Stool

- 675-795mm seat height
- Ø360mm padded seat
- 360° seat rotation
- 130kg capacity

$99 ~~$110~~ (A359)

RST-300 Platform Trolley

- 300kg load capacity
- 915 x 615mm platform
- 2 fixed & 2 swivel wheels
- 127mm rubber wheels

$88 ~~$99~~ (T670)

Angelo - Digital Angle Gauge

- 0 - 360° with LCD display
- Absolute & incremental
- 228mm blade length

$66 ~~$71.50~~ (M978)

Digital Angle Rule

- 480mm blade length
- 360° range
- Stainless steel
- Quick lock system

$39 ~~$49.50~~ (M974)

4 Piece Measuring Kit

- 0 - 25mm Micrometer
- 150mm / 6" Rule
- 150mm / 6" Vernier
- 100 x 70mm Square

$49 ~~$54.45~~ (M012)

Folding Utility Knife

- Quick blade change
- One-hand opening & closing
- Aluminium body
- Includes 5 blades

$10 ~~$13.20~~ (08048)

Model 480 Professional Engraver

- Ergonomic design
- 100 strokes per minute
- Adjustable penetration depth
- Includes 4 engraving points

$66 ~~$84.70~~ (R990)

Metric HSS Hole Saw Set

- 11 piece set
- M42 Bi-Metal high speed steel
- 19, 22, 25, 32, 35, 38, 44, 51, 57, 64, 76mm
- Includes 3/8" & 1/2" arbor shank & pilot drill

$93 ~~$110~~ (D102)

Imperial Precision HSS Jobber Drill Set

- 29 piece set
- Precision ground flutes
- HSS M2 bright finish
- Range: 1/16 – 1/2"
- 1/64" increments

$89 ~~$104.50~~ (D1282)

BD-325 Bench Drill

- 16mm drill capacity
- 2MT spindle
- 12 spindle speeds
- Swivel & tilt table
- 1hp, 240Vmotor

$308 ~~$330~~ (D590)

PN-1 Portable Hand Notcher

- 40 x 40 x 1mm mild steel capacity
- Easy to use with comfortable hand grip

$69 ~~$93.50~~ (S182)

PPS-7 Hole Punch Set

- 1.2mm mild steel capacity
- 3/32", 1/8", 5/32", 3/16", 7/32", 1/4" & 9/32" punches & dies
- Includes plastic storage case

$55 ~~$60.50~~ (P112)

Metric Hex Key Set

- 2, 2.5, 3, 4, 5, 6, 8, 10mm
- Chrome vanadium steel
- Adjustable 3 detent positions on T-bar handle
- Free spinning rotating handle

$69 ~~$82.50~~ (H820)

Imperial Hex Key Set

- 5/64, 3/32, 1/8, 5/32, 3/16, 1/4, 5/16, 3/18"
- Chrome vanadium steel
- Adjustable 3 detent positions on T-bar handle
- Free spinning rotating handle

$69 ~~$82.50~~ (H821)

HS-12 Hand Lever Shear

- 300mm blade
- 5mm flat bar
- 12.7mm round

$149 ~~$185~~ (S188)

PROMAX 200 - Auto Darken Welding Helmet

- Application: Mig, Tig, Arc & Grinding
- 9 – 13 adjustable shade
- 2 arc activation sensors
- 96 x 39mm ultra clear vision
- Switching speed 0.00003 sec

$69 ~~$88~~ (W001)

VIPER 150 - Multi-Function Inverter Welder-MIG-MMA

- 30 - 150 Amps
- 240V - 10amp
- Gas / gasless
- 15% @ 150A duty cycle

$440 ~~$495~~ (W245)

UNIQUE PROMO CODE

SCMAY18

ONLINE OR INSTORE!

VIEW AND PURCHASE THESE ITEMS ONLINE AT

www.machineryhouse.com.au/SCMAY18

SYDNEY	BRISBANE	MELBOURNE	PERTH
(02) 9890 9111	(07) 3274 4222	(03) 9212 4422	(08) 9373 9999
1/2 Windsor Rd, Northmead	625 Boundary Rd, Coopers Plains	4 Abbotts Rd, Dandenong	11 Valentine St, Kewdale

Specifications & Prices are subject to change without notification. All prices include GST and valid until 31-05-18